Disclaimer

This user manual is provided as a free service by FixYourDLP.com. FixYourDLP is in no way responsible for the content of this manual, nor do we guarantee its accuracy. FixYourDLP does not make any claim of copyright and all copyrights remain the property of their respective owners.

About FixYourDLP.com
FixYourDLP.com (http://www.fixyourdlp.com) is the World's #1 resource for media product news, reviews, do-it-yourself guides, and manuals.

Informational Blog: http://www.fixyourdlp.com
Video Guides: http://www.fixyourdlp.com/guides
User Forums: http://www.fixyourdlp.com/forum

FixYourDLP's Fight Against Counterfeit Lamps:
http://www.fixyourdlp.com/counterfeits

Sponsors:

RecycleYourLamp.org – Free lamp recycling services for used lamps:
http://www.recycleyourlamp.org

Lamp Research - The trusted 3rd party lamp research company:
http://www.lampresearch.com

Discount-Merchant.com – The worlds largest lamp distributor:
http://www.discount-merchant.com

Acer Projector

P5271/P5271i/P5271n/P5390W/ P5290 Series User's Guide

FixYourDLP.com
Sponsored by DM
Discount-Merchant.com (800) 281-8860
THE TRUSTED SOURCE FOR PROJECTOR LAMPS AND ACCESSORIES

Copyright © 2009. Acer Incorporated.
All Rights Reserved.

Acer Projector P5271/P5271i/P5271n/P5390W/P5290 Series User's Guide
Original Issue: 06/2009

Changes may be made periodically to the information in this publication without obligation to notify any person of such revisions or changes. Such changes will be incorporated in new editions of this manual or supplementary documents and publications. This company makes no representations or warranties, either expressed or implied, with respect to the contents hereof and specifically disclaims the implied warranties of merchantability or fitness for a particular purpose.

Record the model number, serial number, purchase date and place of purchase information in the space provided below. The serial number and model number are recorded on the label affixed to your projector. All correspondence concerning your unit should include the serial number, model number and purchase information.

No part of this publication may be reproduced, stored in a retrieval system, or transmitted, in any form or by any means, electronically, mechanically, by photocopy, recording or otherwise, without the prior written permission of Acer Incorporated.

Acer Projector P5271/P5271i/P5271n/P5390W/P5290 Series

Model number: _____

Serial number: _____

Date of purchase: _____

Place of purchase: _____

FixYourDLP.com
Sponsored by DM
Discount-Merchant.com (800) 281-8860
THE TRUSTED SOURCE FOR PROJECTOR LAMPS AND ACCESSORIES

Acer and the Acer logo are registered trademarks of Acer Incorporated. Other companies' product names or trademarks are used herein for identification purposes only and belong to their respective companies.

"HDMI™, the HDMI logo and High-Definition Multimedia Interface are trademarks or registered trademarks of HDMI Licensing LLC."

Information for your safety and comfort

Read these instructions carefully. Keep this document for future reference. Follow all warnings and instructions marked on the product.

Turning the product off before cleaning

Unplug this product from the wall outlet before cleaning. Do not use liquid cleaners or aerosol cleaners. Use a damp cloth for cleaning.

Caution for plug as disconnecting device

Observe the following guidelines when connecting and disconnecting power to the external power supply unit:

- Install the power supply unit before connecting the power cord to the AC power outlet.
- Unplug the power cord before removing the power supply unit from the projector.
- If the system has multiple sources of power, disconnect power from the system by unplugging all power cords from the power supplies.

Caution for Accessibility

Be sure that the power outlet you plug the power cord into is easily accessible and located as close to the equipment operator as possible. When you need to disconnect power to the equipment, be sure to unplug the power cord from the electrical outlet.

Warnings!

- Do not use this product near water.
- Do not place this product on an unstable cart, stand or table. If the product falls, it could be seriously damaged.
- Slots and openings are provided for ventilation to ensure reliable operation of the product and to protect it from overheating. These openings must not be blocked or covered. The openings should never be blocked by placing the product on a bed, sofa, rug or other similar surface. This product should never be placed near or over a radiator or heat register, or in a built-in installation unless proper ventilation is provided.
- Never push objects of any kind into this product through cabinet slots as they may touch dangerous voltage points or short-out parts that could result in a fire or electric shock. Never spill liquid of any kind onto or into the product.

FixYourDLP.com
Sponsored by DLI
Discount-Merchant.com (800) 281-8860
THE TRUSTED SOURCE FOR PROJECTOR LAMPS AND ACCESSORIES

- To avoid damage of internal components and to prevent battery leakage, do not place the product on a vibrating surface.
- Never use it under sporting, exercising, or any vibrating environment which will probably cause unexpected short current or damage rotor devices, lamp.

Using electrical power

- This product should be operated from the type of power indicated on the marking label. If you are not sure of the type of power available, consult your dealer or local power company.
- Do not allow anything to rest on the power cord. Do not locate this product where people will walk on the cord.
- If an extension cord is used with this product, make sure that the total ampere rating of the equipment plugged into the extension cord does not exceed the extension cord ampere rating. Also, make sure that the total rating of all products plugged into the wall outlet does not exceed the fuse rating.
- Do not overload a power outlet, strip or receptacle by plugging in too many devices. The overall system load must not exceed 80% of the branch circuit rating. If power strips are used, the load should not exceed 80% of the power strip's input rating.
- This product's AC adapter is equipped with a three-wire grounded plug. The plug only fits in a grounded power outlet. Make sure the power outlet is properly grounded before inserting the AC adapter plug. Do not insert the plug into a non-grounded power outlet. Contact your electrician for details.

Warning! The grounding pin is a safety feature. Using a power outlet that is not properly grounded may result in electric shock and/or injury.

Note: The grounding pin also provides good protection from unexpected noise produced by other nearby electrical devices that may interfere with the performance of this product.

- Use the product only with the supplied power supply cord set. If you need to replace the power cord set, make sure that the new power cord meets the following requirements: detachable type, UL listed/CSA certified, type SPT-2, rated 7A 125V minimum, VDE approved or its equivalent, 4.6 meters (15 feet) maximum length.

FixYourDLP.com
Sponsored by DM
Discount-Merchant.com (800) 281-8860
THE TRUSTED SOURCE FOR PROJECTOR LAMPS AND ACCESSORIES

Product servicing

Do not attempt to service this product yourself, as opening or removing covers may expose you to dangerous voltage points or other risks. Refer all servicing to qualified service personnel.

Unplug this product from the wall outlet and refer servicing to qualified service personnel when:

- the power cord or plug is damaged, cut or frayed
- liquid was spilled into the product
- the product was exposed to rain or water
- the product has been dropped or the case has been damaged
- the product exhibits a distinct change in performance, indicating a need for service
- the product does not operate normally after following the operating instructions

Note: Adjust only those controls that are covered by the operating instructions, since improper adjustment of other controls may result in damage and will often require extensive work by a qualified technician to restore the product to normal condition.

Warning! For safety reasons, do not use non-compliant parts when adding or changing components. Consult your reseller for purchase options.

Your device and its enhancements may contain small parts. Keep them out of the reach of small children.

Additional safety information

- Do not look into the projector's lens when the lamp is on. The bright may hurt your eyes.
- Turn on the projector first and then signal sources
- Do not place the product in following environments:
  - Space that is poorly ventilated or confined. At least 50cm clearance from walls and free flow of air around the projector is necessary.
  - Locations where temperatures may become excessively high, such as inside of a car with all windows rolled up.
  - Locations where excessive humidity, dust, or cigarette smoke may contaminate optical components, shortening the life span and darkening the image.
  - Locations near fire alarms.
  - Locations with an ambient temperature above 40 °C/104 °F.
  - Locations where the altitudes are higher than 10000 feet.
- Unplug immediately if there is something wrong with your projector. Do not operate if smoke, strange noise or odor comes out of your projector. It

FixYourDLP.com
Sponsored by DM
Discount-Merchant.com (800) 281-8860
THE TRUSTED SOURCE FOR PROJECTOR LAMPS AND ACCESSORIES

might cause fire or electric shock. In this case, unplug immediately and contact your dealer.

- Do not keep using this product to break or drop it. In this case contact your dealer for inspection.
- Do not face the projector lens to the sun. It can lead to fire.
- When switching the projector off, suggest to ensure the projector completes its cooling cycle before disconnecting power.
- Do not turn off the main power abruptly or unplug the projector during operation. It can lead to lamp breakage, fire, electric shock or other trouble. The best way is to wait for the fan to turn off before turning main power off.
- Do not touch air outlet grille and bottom plate which becomes hot.
- Clean the air filter frequently if have. The temperature inside may rise and cause damage when the filter/ventilation slots clogged with dirt or dust.
- Do not look into the air outlet grille when projector is operating. It may hurt your eyes.
- Always open the lens shutter or remove the lens cap when the projector is on.
- Do not block the projector lens with any object when the projector is under operation as this could cause the object to become heated and deformed or even cause a fire. To temporarily turn off the lamp, press HIDE on the projector or remote controller.
- The lamp becomes extremely hot during operation. Allow the projector to cool for approximately 45 minutes prior to removing the lamp assembly for replacement.
- Do not operate lamps beyond the rated lamp life. It could cause it to break on rare occasions.
- Never replace the lamp assembly or any electronic components unless the projector is unplugged.
- The product will detect the life of the lamp itself. Please be sure to change the lamp when is showing warning message.
- When changing the lamp, please allow unit to cool down, and follow all changing instructions.
- Reset the "Lamp Hour Reset" function from the Onscreen display "Management" menu after replacing the lamp module.
- Do not attempt to disassemble this projector. There are dangerous high voltages inside which may hurt you. The only user serviceable part is the lamp which has its own removable cover. Refer servicing only to suitable qualified professional service personnel.
- Do not stand the projector on end vertically. It may cause the projector to fall over, causing injury or damage.
- This product is capable of displaying inverted images for ceiling mount installation. Only use acer ceiling mount kit for mounting the projector and ensure it is securely installed.

FixYourDLP.com
Discount-Merchant.com (800) 281-8860
THE TRUSTED SOURCE FOR PROJECTOR LAMPS AND ACCESSORIES

Operating environment for using wireless function (Optional)

Warning! For safety reasons, turn off all wireless or radio transmitting devices when using your machine under the following conditions. These devices may include, but are not limited to: wireless LAN (WLAN), Bluetooth and/or 3G.

Remember to follow any special regulations in force in any area, and always switch off your device when its use is prohibited or when it may cause interference or danger. Use the device only in its normal operating positions. This device meets RF exposure guidelines when used normally, and it and its antenna are positioned at least 1.5 centimeters (5/8 inches) away from your body. It should not contain metal and you should position the device the above-stated distance from your body.

To successfully transmit data files or messages, this device requires a good quality connection to the network. In some cases, transmission of data files or messages may be delayed until such a connection is available.

Ensure that the above separation distance instructions are followed until the transmission is completed.

Parts of the device are magnetic. Metallic materials may be attracted to the device, and persons with hearing aids should not hold the device to the ear with the hearing aid. Do not place credit cards or other magnetic storage media near the device, because information stored on them may be erased.

Medical devices

Operation of any radio transmitting equipment, including wireless phones, may interfere with the functionality of inadequately protected medical devices. Consult a physician or the manufacturer of the medical device to determine if they are adequately shielded from external RF energy or if you have any questions. Switch off your device in health care facilities when any regulations posted in these areas instruct you to do so. Hospitals or health care facilities may be using equipment that could be sensitive to external RF transmissions.

Pacemakers. Pacemaker manufacturers recommend that a minimum separation of 15.3 centimeters (6 inches) be maintained between wireless devices and a pacemaker to avoid potential interference with the pacemaker. These recommendations are consistent with the independent research by and recommendations of Wireless Technology Research. Persons with pacemakers should do the following:

FixYourPhone.com
Discount-Merchant.com (800) 281-8860
THE TRUSTED SOURCE FOR PROJECTOR LAMPS AND ACCESSORIES

- Always keep the device more than 15.3 centimeters (6 inches) from the pacemaker.
- Not carry the device near your pacemaker when the device is switched on. If you suspect interference, switch off your device, and move it.

Hearing aids. Some digital wireless devices may interfere with some hearing aids. If interference occurs, consult your service provider.

Vehicles

RF signals may affect improperly installed or inadequately shielded electronic systems in motor vehicles such as electronic fuel injection systems, electronic antiskid (antilock) braking systems, electronic speed control systems, and air bag systems. For more information, check with the manufacturer, or its representative, of your vehicle or any equipment that has been added. Only qualified personnel should service the device, or install the device in a vehicle. Faulty installation or service may be dangerous and may invalidate any warranty that may apply to the device. Check regularly that all wireless equipment in your vehicle is mounted and operating properly. Do not store or carry flammable liquids, gases, or explosive materials in the same compartment as the device, its parts, or enhancements. For vehicles equipped with an air bag, remember that air bags inflate with great force. Do not place objects, including installed or portable wireless equipment in the area over the air bag or in the air bag deployment area. If in-vehicle wireless equipment is improperly installed, and the air bag inflates, serious injury could result.

Using your device while flying in aircraft is prohibited. Switch off your device before boarding an aircraft. The use of wireless teledevices in an aircraft may be dangerous to the operation of the aircraft, disrupt the wireless telephone network, and may be illegal.

Potentially explosive environments

Switch off your device when in any area with a potentially explosive atmosphere and obey all signs and instructions. Potentially explosive atmospheres include areas where you would normally be advised to turn off your vehicle engine. Sparks in such areas could cause an explosion or fire resulting in bodily injury or even death. Switch off the device at refueling points such as near gas pumps at service stations. Observe restrictions on the use of radio equipment in fuel depots, storage, and distribution areas; chemical plants; or where blasting operations are in progress. Areas with a potentially explosive atmosphere are often, but not always, clearly marked. They include below deck on boats, chemical transfer or storage facilities, vehicles using liquefied petroleum gas (such as propane or butane), and areas where the air contains chemicals or particles such as grain, dust or metal powders.

FixYourDLP.com
Discount-Merchant.com (800) 281-8860
THE TRUSTED SOURCE FOR PROJECTOR LAMPS AND ACCESSORIES

Caution for Listening

To protect your hearing, follow these instructions.

- Increase the volume gradually until you can hear clearly and comfortably.
- Do not increase the volume level after your ears have adjusted.
- Do not listen to music at high volumes for extended periods.
- Do not increase the volume to block out noisy surroundings.
- Decrease the volume if you can't hear people speaking near you.

Disposal instructions

Do not throw this electronic device into the trash when discarding. To minimize pollution and ensure utmost protection of the global environment, please recycle. For more information on the Waste from Electrical and Electronics Equipment (WEEE) regulations, visit http://www.acer-group.com/public/Sustainability/sustainability01.htm

Mercury advisory

For projectors or electronic products containing an LCD/CRT monitor or display:

"Lamp(s) contain Mercury, Dispose Properly."

Lamp(s) inside this product contain mercury and must be recycled or disposed of according to local, state or federal laws. For more information, contact the Electronic Industries Alliance at www.eiae.org. For lamp-specific disposal information, check www.lamprecycle.org

FixYourDLP.com
Sponsored by DM
Discount-Merchant.com (800) 281-8860
THE TRUSTED SOURCE FOR PROJECTOR LAMPS AND ACCESSORIES

First things first

Usage Notes

Do:

- Turn off the product before cleaning.
- Use a soft cloth moistened with mild detergent to clean the display housing.
- Disconnect the power plug from AC outlet if the product is not being used for a long period of time.

Don't:

- Block the slots and openings on the unit provided for ventilation.
- Use abrasive cleaners, waxes or solvents to clean the unit.
- Use under the following conditions:
  - In extremely hot, cold or humid environments.
  - In areas susceptible to excessive dust and dirt.
  - Near any appliance that generates a strong magnetic field.
  - Place In direct sunlight.

Precautions

Follow all warnings, precautions and maintenance as recommended in this user's guide to maximize the life of your unit.

Warning:

- Do not look into the projector's lens when the lamp is on. The bright light may hurt your eyes.
- To reduce the risk of fire or electric shock, do not expose this product to rain or moisture.
- Please do not open or disassemble the product as this may cause electric shock.
- When changing the lamp, please allow unit to cool down, and follow all changing instructions.
- This product will detect the life of the lamp itself. Please be sure to change the lamp when it shows warning messages.
- Reset the "Lamp Hour Reset" function from the Onscreen display "Management" menu after replacing the lamp module.
- When switching the projector off, please ensure the projector completes its cooling cycle before disconnecting power.
- Turn on the projector first and then the signal sources.
- Do not use lens cap when projector is in operation.
- When the lamp reaches the end of its life, it will burn out and may make a loud popping sound. If this happens, the projector will not turn back on until the lamp module has been replaced. To replace the lamp, follow the procedures listed under "Replacing the Lamp".

FixYourDLP.com
Discount-Merchant.com (800) 281-8860
THE TRUSTED SOURCE FOR PROJECTOR LAMPS AND ACCESSORIES

Contents

Information for your safety and comfort iii

First things first x

Usage Notes x

Precautions x

Introduction 1

Product Features 1

Package Overview 2

Projector Overview 3

Projector Outlook 3

Control Panel 5

Remote Control Layout 6

Getting Started 9

Connecting the Projector 9

Connecting the Projector for Wireless Function 10

Turning the Projector On/Off 11

Turning on the Projector 11

Turning the projector off 12

Adjusting the Projected Image 13

Adjusting the Height of Projected Image 13

How to optimize image size and distance 14

How to get a preferred image size by adjusting distance and zoom 18

How to get a preferred image position by adjusting lens shift 22

User Controls 27

Installation menu 27

Acer Empowering Technology 28

Onscreen Display (OSD) Menus 29

Color 30

Image 31

Management 33

Setting 33

Audio 36

FixYourDLP.com
Sponsor
Discount-Merchant.com (800) 281-8860
THE TRUSTED SOURCE FOR PROJECTOR LAMPS AND ACCESSORIES

Timer 36
Language 37
Appendices 38
Troubleshooting 38
LED & Alarm Definition Listing 42
Replacing the Lamp 43
Ceiling Mount Installation 44
Specifications 47
Compatibility modes 49
Regulations and safety notices 53

FixYourDLP.com
Sponsored by DM
Discount-Merchant.com (800) 281-8860
THE TRUSTED SOURCE FOR PROJECTOR LAMPS AND ACCESSORIES

Introduction

Product Features

This product is a single-chip DLP® projector. Outstanding features include:

- DLP® technology
- P5271/P5271i/P5271n/P5290: Native 1024 x 768 XGA resolution
  P5390W: Native 1280 x 800 WXGA resolution
  4:3 / 16:9 aspect ratio supported (P5271/P5271i/P5271n/P5290)
  Full/4:3/16:9/L.Box aspect ratio supported (P5390W)
- Manual lens shift adjustment
- Acer ColorBoost technology delivers nature's true colors for vivid, life-like images
- High brightness and contrast ratio
- Versatile display modes (Bright, Presentation, Standard, Video, User) enable optimum performance in any situation
- NTSC / PAL / SECAM compatible and HDTV (720p, 1080i, 1080p) supported
- Top-loading lamp design allows easy lamp replacement
- Lower power consumption and economy (ECO) mode extends lamp life
- Acer EcoProjeciton Technology delivers Intelligent power management approach and physical efficiency improvement
- Empowering Key reveals Acer Empowering Technology utilities (Acer eView, eTimer, eOpening, ePower Management) for easy adjustment of settings
- Equipped with HDMI™ connection supporting HDCP
- Advanced digital keystone correction optimizes presentations
- Multi-language onscreen display (OSD) menus
- Full-function remote control
- Manual focus projection lens zooms up to 1.6x (P5271/P5271i/P5271n/P5290/P5390W)
- 2x digital zoom and pan move function
- Microsoft® Windows® 2000, XP, Vista® OS compliant
- Manual lens shift adjustment

FixYourDLP.com
Sponsored by DM
DiscountMerchant.com (800) 281-8860
THE TRUSTED SOURCE FOR PROJECTOR LAMPS AND ACCESSORIES

Package Overview

This projector comes with all the items shown below. Check to make sure your unit is complete. Contact your dealer immediately if any thing is missing.

Projector with lens cap

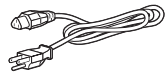

Power cord

VGA cable

Composite video cable

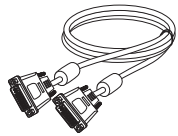

DVI-D Cable

Security card

2 x User's Guide (Wireless CD for P5271i)

#A #B

Remote control (#B for P5271i)

2 x Quick start guide (Wireless Quick Start Guide for P5271i)

2 x Battery

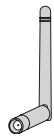

2 x Wireless antenna (P5271i)

Carrying case

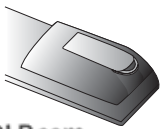

Battery Pack with USB PnS handy drive (P5271i)

FixYourDLP.com
Discount-Merchant.com (800) 281-8860
THE TRUSTED SOURCE FOR PROJECTOR LAMPS AND ACCESSORIES

Projector Overview

Projector Outlook

Front / upper side

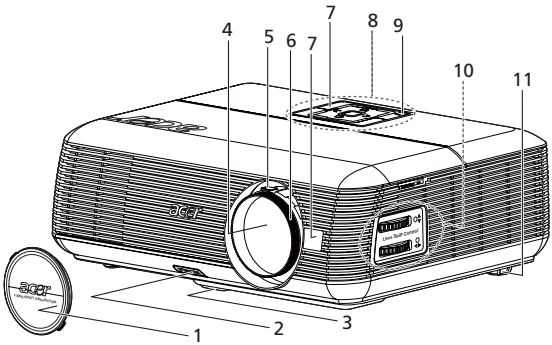

#	Description	#	Description
1	Lens cap	7	Remote control receivers
2	Elevator button	8	Control panel
3	Elevator foot	9	Power button
4	Zoom Lens	10	Lens shift control rings
5	Zoom ring	11	Tilt adjusting wheel
6	Focus ring		

FixYourDLP.com
Sponsored by DM
Discount-Merchant.com (800) 281-8860
THE TRUSTED SOURCE FOR PROJECTOR LAMPS AND ACCESSORIES

Rear side

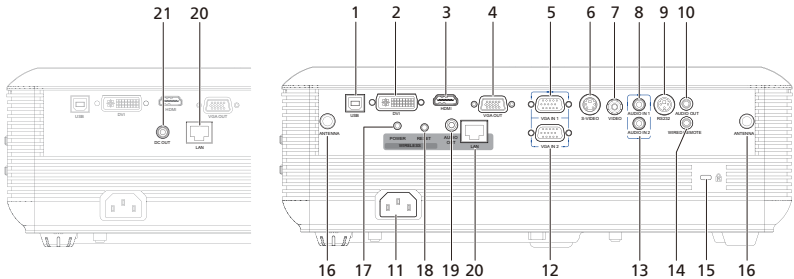

#	Description	#	Description
1	USB connector	13	Audio input connector (VGA IN 2/ DVI)
2	DVI input connector (for digital signal with HDCP function)	14	Wired IR remote input connector
3	HDMI connector	15	Kensington™ lock port
4	Monitor loop-through output connector (VGA-Out)	Below items are for P5271i only:	
5	PC analog signal/HDTV/SCART/ component video input connector (VGA IN 1)	16	Antenna
6	S-Video input connector	17	Power LED for wireless
7	Composite video input connector	18	Reset button
8	Audio input connector (VGA IN 1/ Component/Composite/S-Video/HDMI)	19	Audio output connector for wireless
9	RS232 connector	Below item is for P5271i and P5271n only:	
10	Audio output connector	20	LAN (RJ45 Port for 10/100M Ethernet)
11	Power socket	Below item is for P5271n only:	
12	PC analog signal/HDTV/SCART/ component video input connector (VGA IN 2)	21	DC Output

FixYourDLP.com
Sponsored by DM
Discount-Merchant.com (800) 281-8860
THE TRUSTED SOURCE FOR PROJECTOR LAMPS AND ACCESSORIES

Control Panel

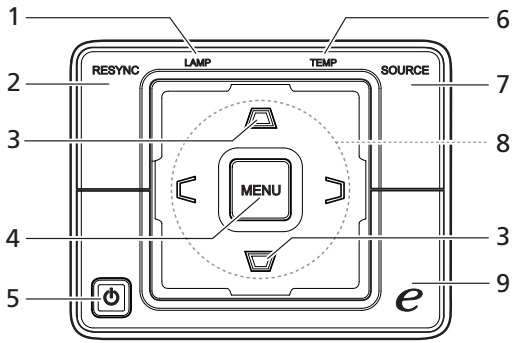

#	Function	Description
1	LAMP	Lamp Indicator LED
2	RESYNC	Automatically synchronizes the projector to the input source.
3	KEYSTONE	Adjusts the image to compensate for distortion caused by tilting the projector.
4	MENU	• Press "**MENU**" to launch the Onscreen display (OSD) menu, back to the previous step for the OSD menu operation or exit the OSD menu. • Confirm your selection of items.
5	POWER	See the contents in "**Turning the Projector On/ Off**" section.
6	TEMP	Temp Indicator LED
7	SOURCE	Press "**SOURCE**" to choose RGB, Component, S-Video, Composite, SCART, HDTV and HDMI™ sources.
8	Four directional select keys	Use to ▲ ▼ ◀ ▶ select items or make adjustments to your selection.
9	Empowering key	Unique Acer functions: eOpening, eView, eTimer, ePower Management.

FixYourDLP.com
Sponsored by DM
Discount-Merchant.com (800) 281-8860
THE TRUSTED SOURCE FOR PROJECTOR LAMPS AND ACCESSORIES

Remote Control Layout

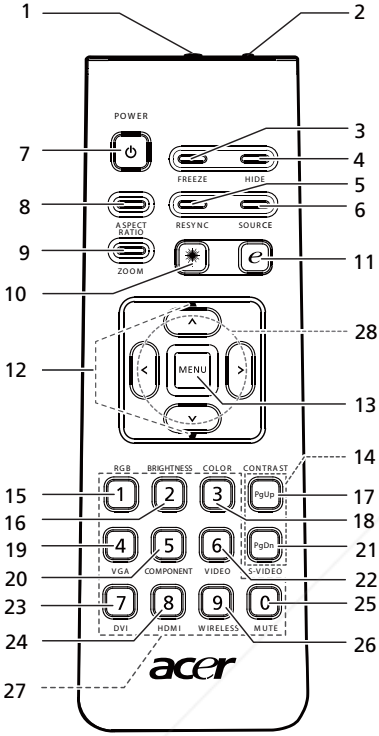

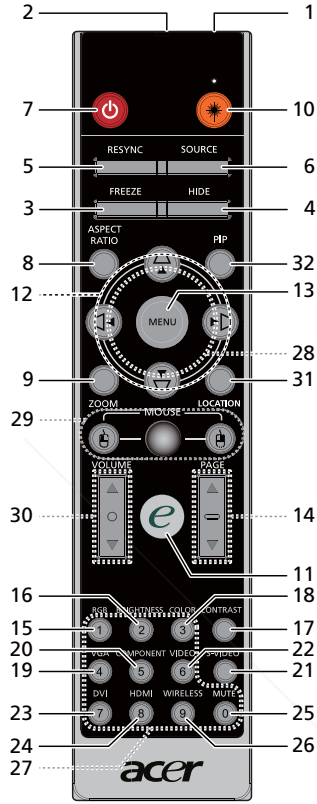

(P5271i)

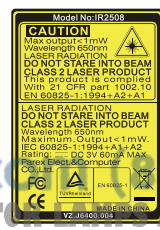

FixYourDesign
Discount-Merchant.com (07) 2[illegible]-8860
THE BIGGEST SOURCE FOR PROJECTOR LAMPS AND ACCESSORIES

#	Icon	Function	Description
1		Infrared transmitter	Sends signals to the projector.
2(#)		Laser pointer	Aim the remote at the viewing screen.
3		FREEZE	To pause the screen image.
4		HIDE	Momentarily turns off the video. Press **"HIDE"** to hide the image, press again to display the image.
5		RESYNC	Automatically synchronizes the projector to the input source.
6		SOURCE	Press "**SOURCE**" to choose from RGB, Component, S-Video, Composite, SCART, HDTV and HDMI™ sources.
7		POWER	Refer to the "**Turning the Projector On/Off**" section.
8		ASPECT RATIO	To choose the desired aspect ratio (Auto/4:3/16:9)
9		ZOOM	Zooms the projector display in or out.
10(#)		Laser button	Aim the remote at the viewing screen, press and hold this button to activate the laser pointer. This function is not supported in Japanese market.
11		Empowering key	Unique Acer functions: eOpening, eView, eTimer, ePower Management.
12		KEYSTONE	Adjusts the image to compensate for distortion caused by tilting the projector (± 40 degrees).
13		MENU	• Press "MENU" to launch the Onscreen display (OSD) menu, back to the previous step for the OSD menu operation or exit the OSD menu. • Confirm your selection of items.
14		PAGE	For computer mode only. Use this button to select the next or previous page. This function is only available when connected to a computer via a USB cable.
15		RGB	Press "**RGB**" for true-color optimization.
16		BRIGHTNESS	Press "**BRIGHTNESS**" to adjust the brightness of the image.
17		CONTRAST	Use the "**CONTRAST**" option to control the difference between the lightest and darkest parts of the picture.
18		COLOR	Press "**COLOR**" to adjust the color temperature of image.
19		VGA	Press "**VGA**" to change source to the VGA connector. This connector supports analog RGB, YPbPr (480p/576p/720p/1080i), YCbCr (480i/576i) and RGBsync.
20		COMPONENT	Press "**COMPONENT**" to change source to Component video. This connection supports YPbPr (480p/576p/720p/1080i) and YCbCr (480i/576i).
21		S-VIDEO	To change source to S-Video.
22		VIDEO	To change source to COMPOSITE VIDEO.
23		DVI	To change source to DVI-D.
24		HDMI™	To change source to HDMI™. (for the model if with HDMI™ connector)
25		MUTE	To turn on/off the volume.
26(*)		WIRELESS	Press "WIRELESS" to display the image which is wirelessly transmitted from the PC to the projector via the "Acer eProjection Management" utility. (for wireless model)
27		KeyPad 0~9	Press "**0~9**" to input a password in the "Security".
28		Four directional select keys	Use up, down, left, right buttons to select items or make adjustments to your selection.

FixYourDLP.com
Discount-Merchant.com (877) 267-8860
THE TRUSTED SOURCE FOR PROJECTOR LAMPS AND ACCESSORIES

#	Icon	Function	Description
29(*)		MOUSE Left/ Right Click	Left-/right-click buttons are on the left and right, respectively; the center button works as a multidirectional pointer stick. To enable this function, an USB cable must be connected to projector from your PC.
30(*)		VOLUME	Increases/decreases the volume.
31(*)		LOCATION	Choose the menu location on the display screen.
32		PIP	No function

Note: "#" Japan area is not supported.
"*" Only for P5271i.

Note:

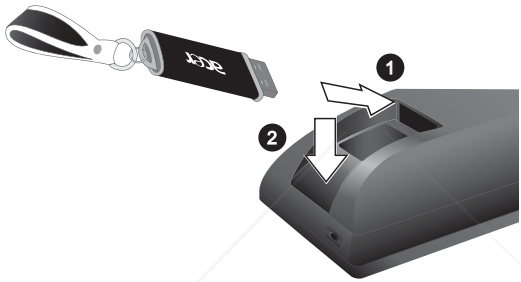

FixYourDLP.com
Sponsored by DM
Discount-Merchant.com (800) 281-8860
THE TRUSTED SOURCE FOR PROJECTOR LAMPS AND ACCESSORIES

Getting Started

Connecting the Projector

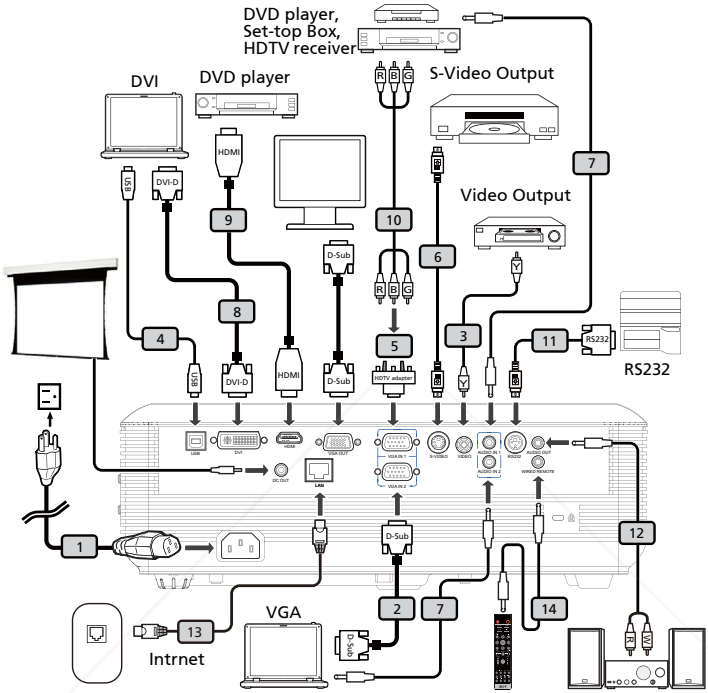

#	Description	#	Description
1	Power cord	8	DVI cable
2	VGA cable	9	HDMI cable
3	Composite video cable	10	3 RCA component cable
4	USB cable	11	RS232 cable
5	VGA to component/HDTV adapter	12	Audio cable Jack/RCA
6	S-Video cable	13	LAN Cable
7	Audio cable jack/jack	14	Audio cable jack for wired remote

FixYourDLP.com
Sponsored by DM
Discount-Merchant.com (800) 281-8860
THE TRUSTED SOURCE FOR PROJECTOR LAMPS AND ACCESSORIES

Note: To ensure the projector works well with your computer, please make sure the timing of the display mode is compatible with the projector.

Connecting the Projector for Wireless Function

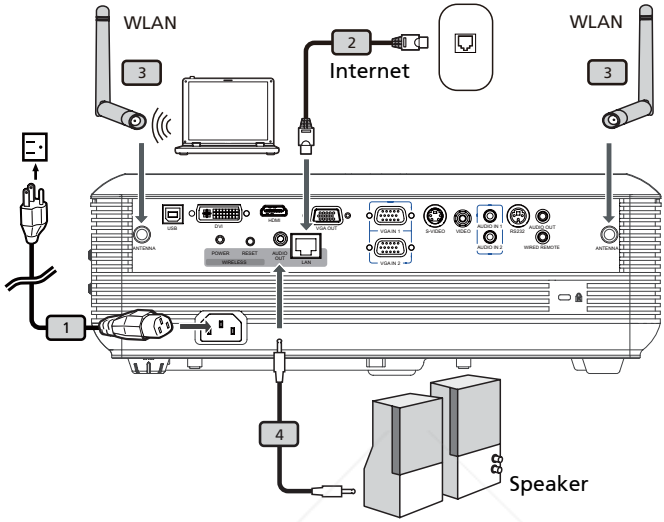

#	Description
1	Power cord
2	LAN cable
3	Antenna
4	Audio cable jack

Note: For P5271i only

FixYourDLP.com
Sponsored by DM
Discount-Merchant.com (800) 281-8860
THE TRUSTED SOURCE FOR PROJECTOR LAMPS AND ACCESSORIES

Turning the Projector On/Off

Turning on the Projector

1 Remove the lens cap.(Illustration #1)

2 Ensure that the power cord and signal cable are securely connected. The Power indicator LED will flash red.

3 Turn on the projector by pressing "**Power**" button on the control panel, and the Power indicator LED will turn blue.(Illustration #2)

4 Turn on your source (computer, notebook, video player ,etc.). The projector will detect your source automatically.

- If the screen displays "Lock" and "Source" icons, it means the projector is locked onto a specific source type and there is no such type of input signal detected.
- If the screen displays "No Signal", please make sure the signal cables are securely connected.
- If you connect to multiple sources at the same time, use the "Source" button on either control panel or the remote control or direct source key on the remote control to switch between inputs.

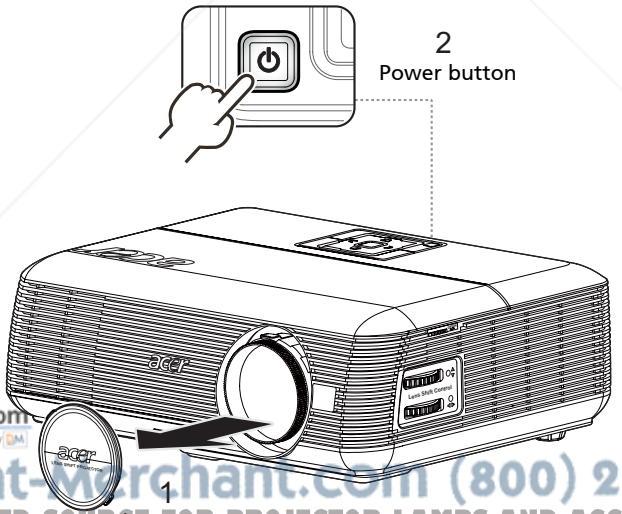

FixYourDLP.com
Sponsored by DM
Discount-Merchant.com (800) 281-8860
THE TRUSTED SOURCE FOR PROJECTOR LAMPS AND ACCESSORIES

Turning the projector off

1 To turn the projector off, press the power button. This message appears: **"Please press the power button again to complete the shutdown process."** Press the power button again.

2 The LED power indicator will turn RED and blink rapidly after the projector is turned off, and the fan(s) will continue to operate for about 2 minutes to ensure that the system cools properly.

3 As long as the power cord remains plugged in, you can press the power button to turn the projector immediately back on anytime during the 2-minute shutdown process.

4 Once the system has finished cooling, the LED power indicator will stop blinking and turn solid red to indicate standby mode.

5 It is now safe to unplug the power cord.

Warning indicators:

- **"Projector Overheated. Lamp will automatically turn off soon."**
  This onscreen message indicates that the projector has overheated. The lamp with automatically turn off, the projector will automatically shut down, and the LED temp indicator will turn solid red. Contact your local dealer or service center.
- **"Fan failed. Lamp will automatically turn off soon."**
  This onscreen message indicates that the fan has failed. The lamp will automatically turn off, the projector will automatically shut down, and the LED temp indicator will blink. Contact your local dealer or service center.

Note: Whenever the projector automatically shuts down and the LED lamp indicator turns solid red, contact your local reseller or service center.

FixYourDLP.com
Sponsored by DM
Discount-Merchant.com (800) 281-8860
THE TRUSTED SOURCE FOR PROJECTOR LAMPS AND ACCESSORIES

Adjusting the Projected Image

Adjusting the Height of Projected Image

The projector is equipped with elevator feet for adjusting the height of image.

To raise the image:

1 Press the elevator foot release. (Illustration #1)

2 Raise the image to the desired height angle (Illustration #2), then release the button to lock the elevator foot into position.

3 Use Tilt adjusting wheel (Illustration #3) to fine-tune the display angle.

To lower the image:

1 Press the elevator foot release. (Illustration #1)

2 Lower the image to the desired height angle (Illustration #2) , then release the button to lock the elevator foot into position.

3 Use Tilt adjusting wheel (Illustration #3) to fine-tune the display angle.

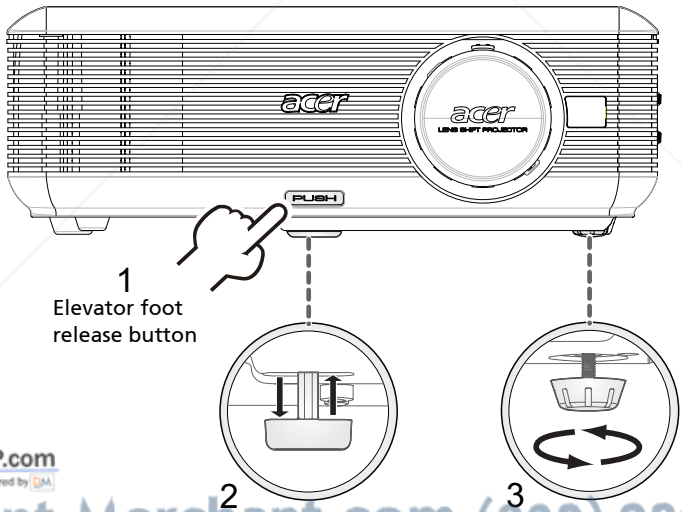

FixYourDLP.com
Sponsored by DM
Discount-Merchant.com (800) 281-8860
THE TRUSTED SOURCE FOR PROJECTOR LAMPS AND ACCESSORIES

How to optimize image size and distance

Consult the table below to find the optimal image sizes achievable when the projector is positioned at a desired distance from the screen.

- P5271/P5271i/P5271n/P5290 Example: If the projector is 3 m from the screen, good image quality is possible for image sizes between 56" and 91".

P5271/P5271i/P5271n/P5290

Note: Remind as below figure, the space of 181 cm height is required when located at 3m distance.

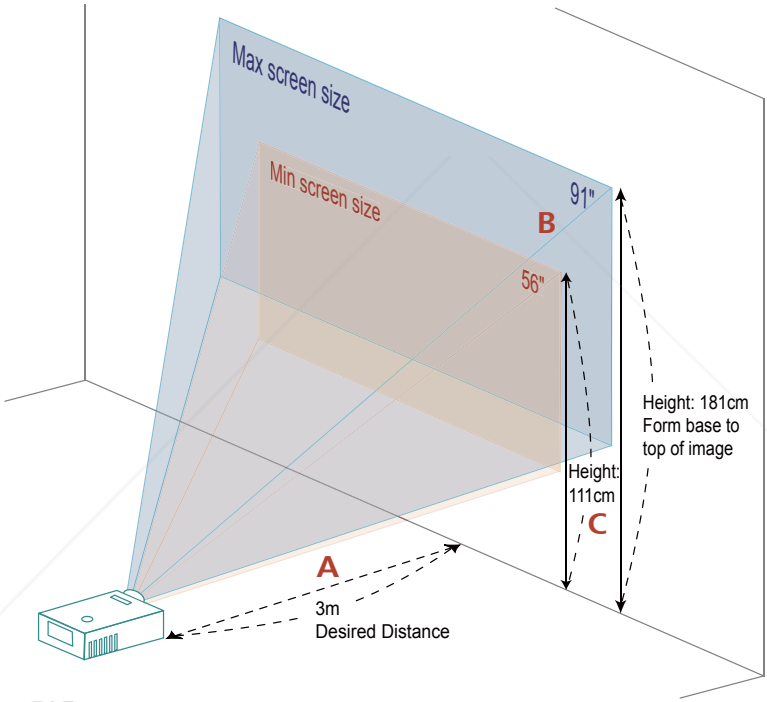

FixYourDLP.com
Sponsored by DM

Figure: Fixed distance with different zoom and screen size.

Discount-Merchant.com (800) 281-8860
THE TRUSTED SOURCE FOR PROJECTOR LAMPS AND ACCESSORIES

P5271/P5271i/P5271n/P5290

Desired Distance (m) <A>	Screen size (Min zoom)		Top	Screen size (Max zoom)		Top
	Diagonal (inch) <B>	W (cm) x H (cm)	From base to top of image (cm) <C>	Diagonal (inch) <B>	W (cm) x H (cm)	From base to top of image (cm) <C>
1.5	28	57 x 43	55	46	93 x 69	90
2	37	76 x 57	74	61	123 x 93	120
2.5	47	95 x 71	92	76	154 x 116	150
3	56	114 x 85	111	91	185 x 139	181
3.5	65	133 x 99	129	106	216 x 162	211
4	75	152 x 114	148	122	247 x 185	241
4.5	84	170 x 128	166	137	278 x 208	271
5	93	189 x 142	185	152	309 x 231	301
6	112	227 x 170	222	182	370 x 278	361
7	130	265 x 199	259	213	432 x 324	421
8	149	303 x 227	295	243	494 x 370	481
9	168	341 x 256	332	273	556 x 417	542
10	186	379 x 284	369	304	617 x 463	602
11	205	417 x 313	406	334	679 x 509	662
12	224	455 x 341	443	365	741 x 556	722

Zoom Ratio: 1.6x

FixYourDLP.com
Sponsored by DM
Discount-Merchant.com (800) 281-8860
THE TRUSTED SOURCE FOR PROJECTOR LAMPS AND ACCESSORIES

- P5390W Example: If the projector is 3 m from the screen, good image quality is possible for image sizes between 66" and 107".

P5390W

Note: Remind as below figure, the space of 180 cm height is required when located at 3m distance.

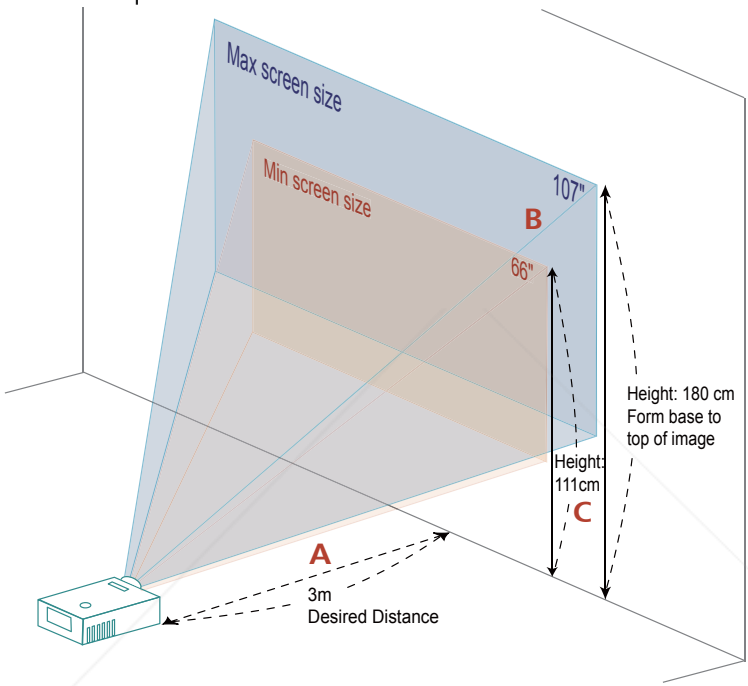

Figure: Fixed distance with different zoom and screen size.

FixYourDLP.com
Sponsored by DM
Discount-Merchant.com (800) 281-8860
THE TRUSTED SOURCE FOR PROJECTOR LAMPS AND ACCESSORIES

P5390W

Desired Distance (m) <A>	Screen size (Min zoom)		Top	Screen size (Max zoom)		Top
	Diagonal (inch) <B>	W (cm) x H (cm)	From base to top of image (cm) <C>	Diagonal (inch) <B>	W (cm) x H (cm)	From base to top of image (cm) <C>
1.5	33	71 x 44	56	54	115 x 72	90
2	44	95x 59	74	71	154x 96	120
2.5	55	118 x 74	93	89	192 x 120	150
3	66	142 x 89	111	107	231 x 144	180
3.5	77	166 x 104	130	125	269 x 168	210
4	88	190 x 118	148	143	308 x 192	240
4.5	99	213 x 133	167	161	346 x 216	270
5	110	237 x 148	185	179	385 x 240	300
6	132	284 x 178	222	214	462 x 288	361
7	154	332 x 207	259	250	538 x 337	421
8	176	379 x 237	296	286	615 x 385	481
9	198	427 x 267	333	321	692 x 433	541
10	220	474 x 296	370	357	769 x 481	601
11	242	521 x 326	407	393	846 x 529	661
12	264	569 x 355	444	429	923 x 577	721

Zoom Ratio: 1.6x

FixYourDLP.com
Sponsored by DM
Discount-Merchant.com (800) 281-8860
THE TRUSTED SOURCE FOR PROJECTOR LAMPS AND ACCESSORIES

How to get a preferred image size by adjusting distance and zoom

P5271/P5271i/P5271n/P5290

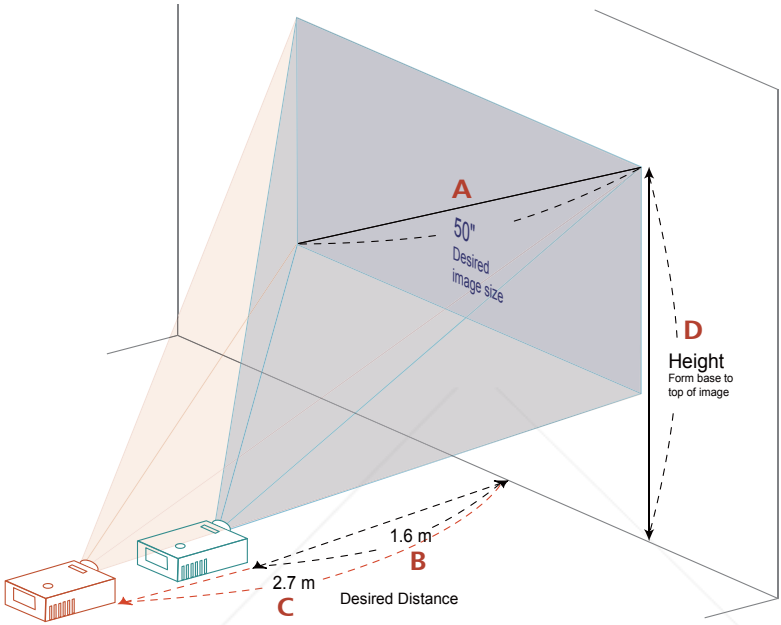

The table below shows how to achieve a desired image size by adjusting either the position or the zoom ring. For example: to obtain an image size of 50" set the projector at a distance 1.6 m and 2.7 m from the screen and adjust the zoom level accordingly.

FixYourDLP.com
Sponsored by DM
Discount-Merchant.com (800) 281-8860
THE TRUSTED SOURCE FOR PROJECTOR LAMPS AND ACCESSORIES

P5271/P5271i/P5271n/P5290

Desired Image Size		Distance (m)		Top (cm)
Diagonal (inch) <A>	W (cm) x H (cm)	Max zoom <B>	Min zoom <C>	From base to top of image <D>
30	61 x 46	1.0	1.6	59
40	81 x 61	1.3	2.1	79
50	102 x 76	1.6	2.7	99
60	122 x 91	2.0	3.2	119
70	142 x 107	2.3	3.8	139
80	163 x 122	2.6	4.3	158
90	183 x 137	3.0	4.8	178
100	203 x 152	3.3	5.4	198
120	244 x 183	4.0	6.4	238
150	305 x 229	4.9	8.0	297
180	366 x 274	5.9	9.7	357
200	406 x 305	6.6	10.7	396
250	508 x 381	8.2	13.4	495
300	610 x 457	9.9		594

Zoom Ratio: 1.6x

FixYourDLP.com
Sponsored by DM
Discount-Merchant.com (800) 281-8860
THE TRUSTED SOURCE FOR PROJECTOR LAMPS AND ACCESSORIES

P5390W

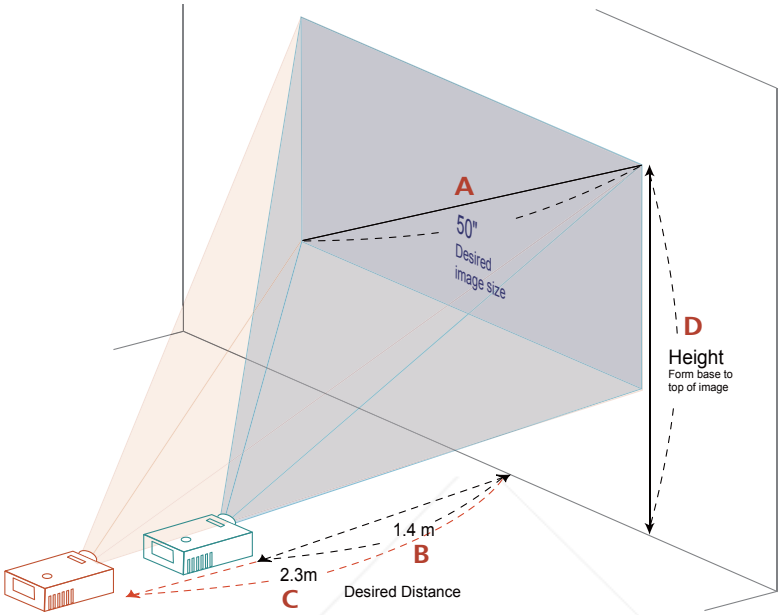

The table below shows how to achieve a desired image size by adjusting either the position or the zoom ring. For example: to obtain an image size of 50" set the projector at a distance 1.4 m and 2.3 m from the screen and adjust the zoom level accordingly.

FixYourDLP.com
Sponsored by DM
Discount-Merchant.com (800) 281-8860
THE TRUSTED SOURCE FOR PROJECTOR LAMPS AND ACCESSORIES

P5390W

Desired Image Size		Distance (m)		Top (cm)
Diagonal (inch) <A>	W (cm) x H (cm)	Max zoom <B>	Min zoom <C>	From base to top of image <D>
30	65 x 40	0.8	1.4	50
40	86 x 54	1.1	1.8	67
50	108 x 67	1.4	2.3	84
60	129 x 81	1.7	2.7	101
70	151 x 94	2.0	3.2	118
80	172 x 108	2.2	3.6	135
90	194 x 121	2.5	4.1	151
100	215 x 135	2.8	4.5	168
120	258 x 162	3.4	5.5	202
150	323 x 202	4.2	6.8	252
180	388 x 242	5.0	8.2	303
200	431 x 269	5.6	9.1	337
250	538 x 337	7.0	11.4	421
300	646 x 404	8.4		505

Zoom Ratio: 1.6x

FixYourDLP.com
Sponsored by DM
Discount-Merchant.com (800) 281-8860
THE TRUSTED SOURCE FOR PROJECTOR LAMPS AND ACCESSORIES

How to get a preferred image position by adjusting lens shift

The projector is equipped with lens shift for adjusting the position of projected image right and left or up and down without requiring you to physically move the projector.

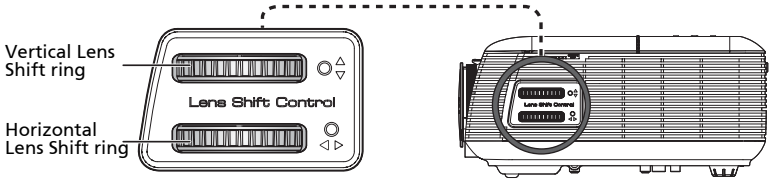

Note: The figures shown in this section are for reference only not approximate value. The figures between units can be different due to assembly tolerance.

FixYourDLP.com
Sponsored by DM
Discount-Merchant.com (800) 281-8860
THE TRUSTED SOURCE FOR PROJECTOR LAMPS AND ACCESSORIES

Adjusting the horizontal or vertical image position

P5271/P5271i/P5271n/P5290

The vertical image height can be adjusted between 5% and 30% of the image height. (The minimum vertical image offset is fixed at 5% of the image height above the centre of the projector lens.)
With the lens in the centre position the horizontal image position can be adjusted to the left or right by up to a maximum of 30% of the image width.

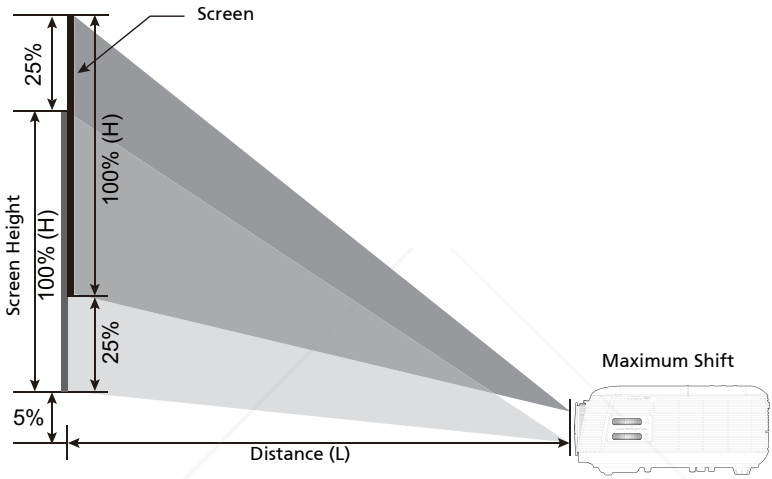

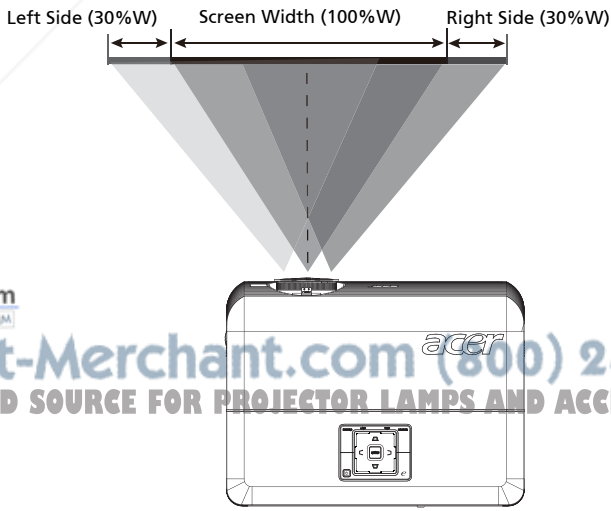

FixYourDLP.com
Sponsored by DM
Discount-Merchant.com (800) 281-8860
THE TRUSTED SOURCE FOR PROJECTOR LAMPS AND ACCESSORIES

Note: The maximum shift of vertical (horizontal) image adjustment can be limited by horizontal (vertical) image position. Please refer below diagram.

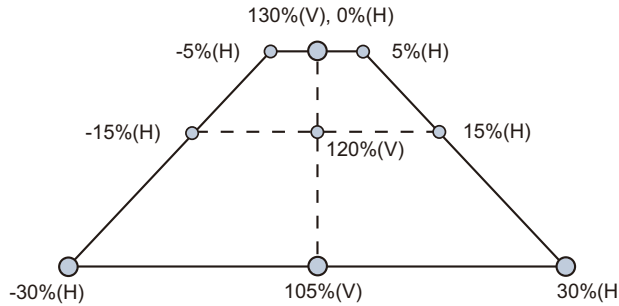

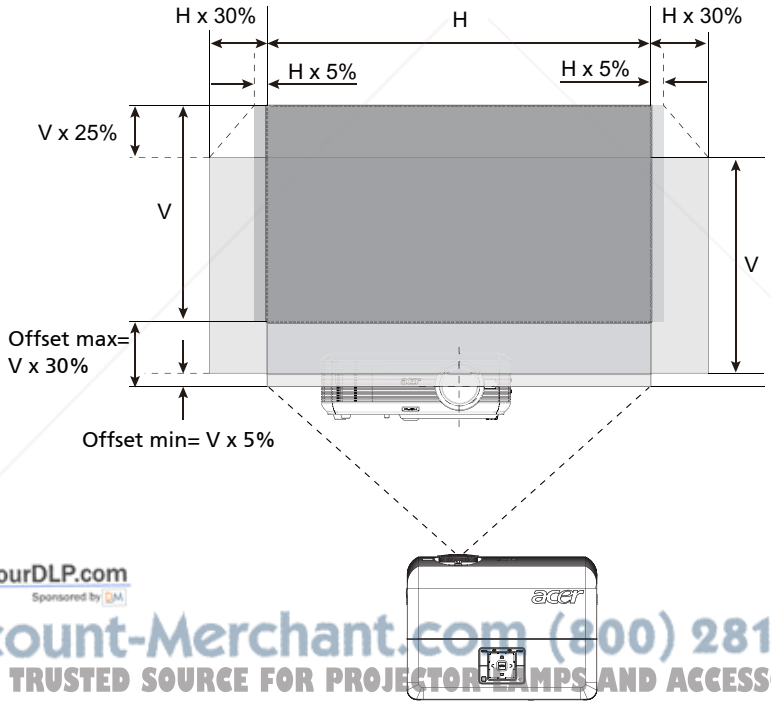

FixYourDLP.com
Sponsored by
Discount-Merchant.com (800) 281-8860
THE TRUSTED SOURCE FOR PROJECTOR LAMPS AND ACCESSORIES

P5390W

The vertical image height can be adjusted between 5% and 25% of the image height. (The minimum vertical image offset is fixed at 5% of the image height above the centre of the projector lens.)
With the lens in the centre position the horizontal image position can be adjusted to the left or right by up to a maximum of 15% of the image width.

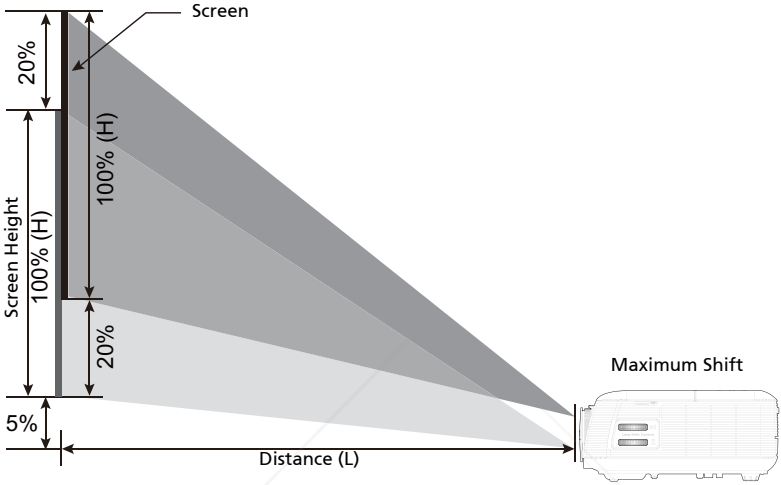

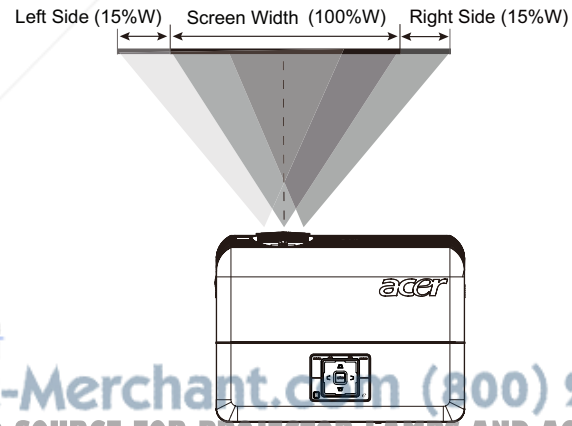

FixYourDLP.com
Sponsored by
Discount-Merchant.com (800) 281-8860
THE TRUSTED SOURCE FOR PROJECTOR LAMPS AND ACCESSORIES

Note: The maximum shift of vertical (horizontal) image adjustment can be limited by horizontal (vertical) image position. Please refer below diagram.

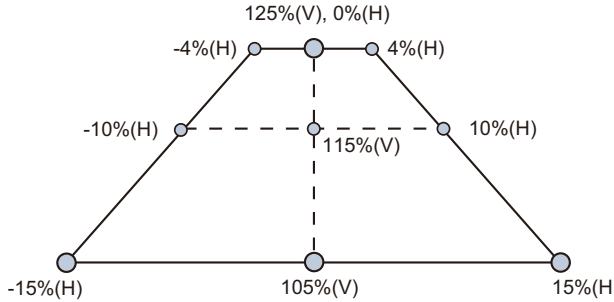

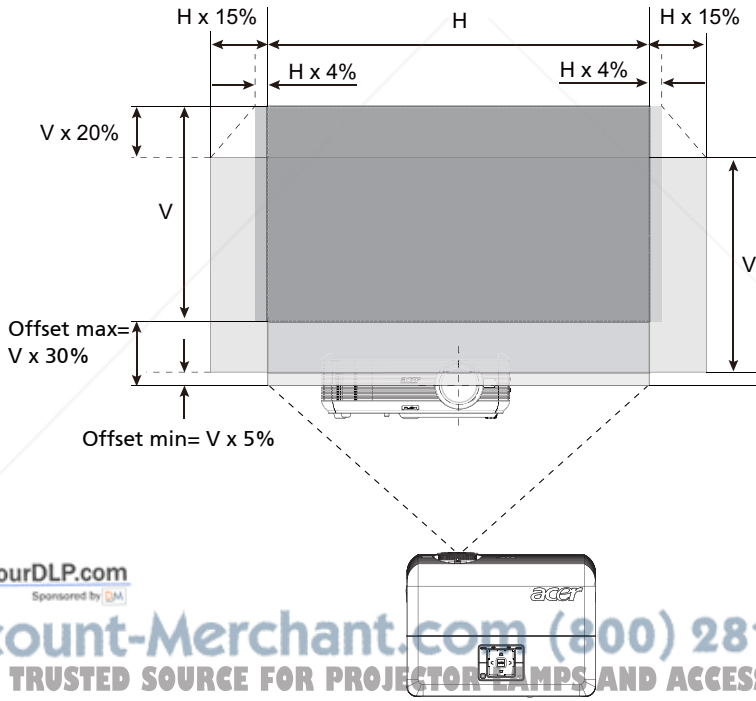

FixYourDLP.com
Sponsored by DM
Discount-Merchant.com (800) 281-8860
THE TRUSTED SOURCE FOR PROJECTOR LAMPS AND ACCESSORIES

User Controls

Installation menu

The installation menu provides an onscreen display (OSD) for projector installation and maintenance. Use the OSD only when the message "No signal input" is displayed on the screen.

The menu options include settings and adjustments for screen size and distance, focus, keystone correction and more .

1 Turn on the projector by pressing "Power" button on the control pad.

2 Press the menu button on the control pad to launch the OSD for projector installation and maintenance.

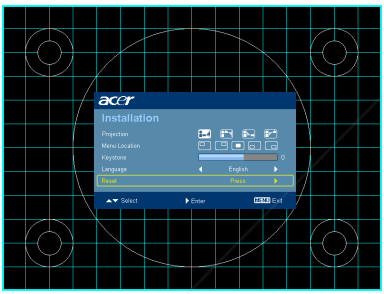

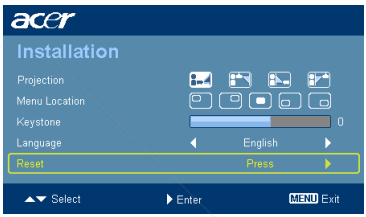

3 The background pattern acts as a guide to adjusting the calibration and alignment settings, such as screen size and distance, focus and more .

4 The Installation menu includes the following options:

- Projection method
- Menu location
- Keystone settings
- Language settings
- Reset to factory default function

Use the up and down arrow keys to select an option, the left and right arrow keys to adjust selected option settings, and the right arrow key to enter a submenu for feature setting. The new settings will be saved automatically upon exiting the menu.

5 Push the menu button anytime to exit the menu and return to the Acer welcome screen.

FixYourDLP.com
Sponsored by DM
DiscountMedium.com (800) 281-8860
THE TRUSTED SOURCE FOR PROJECTOR LAMPS AND ACCESSORIES

Acer Empowering Technology

Empowering Key 	Acer Empowering Key provides four Acer unique functions, they are "Acer eView Management", "Acer eTimer Management", "Acer eOpening Management" and "Acer ePower Management" respectively. Press "e" key for more than one second to launch the Onscreen display main menu to modify its function.
Acer eView Management 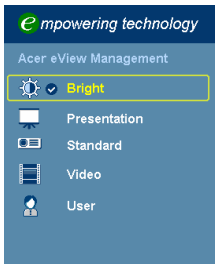 	Press "e" to launch "Acer eView Management" submenu. "Acer eView Management" is for display mode selection. Please refer to Onscreen Display Menus section for more detail.
Acer eTimer Management 	Press "e" to launch "Acer eTimer Management" submenu. "Acer eTimer Management" provides the reminding function for presentation time control. Please refer to Onscreen Display Menus section for more detail.
Acer eOpening Management 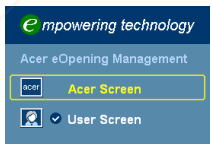 	Press "e" to launch "Acer eOpening Management". "Acer eOpening Management" allows user to change the Startup screen to their personalized image. Please refer to Onscreen Display section for more detail.
Acer ePower Management 	Press "e" to launch "Acer ePower Management". "Acer ePower Management" provides user one shortcut to save lamp and projector life. Please refer to Onscreen Display section for more detail.

FixYourDLP.com
Sponsored by
DiscountMerchant.com (888) 881-8860
THE TRUSTED SOURCE FOR PROJECTOR LAMPS AND ACCESSORIES

Onscreen Display (OSD) Menus

The projector has multilingual OSD that allow you to make image adjustments and change a variety of settings.

Using the OSD menus

- To open the OSD menu, press **"MENU"** on the remote control or control panel.
- When the OSD is displayed, use the ▲ ▼ keys to select any item in the main menu. After selecting the desired main menu item, press ▶ to enter submenu for feature setting.
- Use the ▲ ▼ keys to select the desired item and adjust the settings by using the ◀ ▶ keys.
- Select the next item to be adjusted in the submenu and adjust as described above.
- Press **"MENU"** on the remote control or control panel, the screen will return to the main menu.
- To exit OSD, press **"MENU"** on the remote control or control panel again. The OSD menu will close and the projector will automatically save the new settings.

FixYourDLP.com
Sponsored by DM
Discount-Merchant.com (800) 281-8860
THE TRUSTED SOURCE FOR PROJECTOR LAMPS AND ACCESSORIES

Color

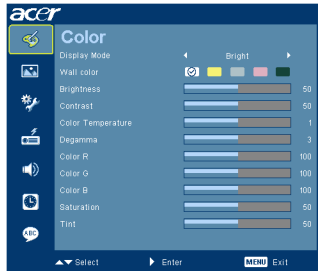

Display Mode	There are many factory presets optimized for various types of images. • Bright: For brightness optimization. • Presentation: For meeting presentation. • Standard: For common environment. • Video: For playing video in a bright environment. • User: Memorize user's settings.
Wall color	Use this function to choose a proper color according to the wall. There are several choices, including white, light yellow, light blue, pink, dark green. It will compensate the color deviation due to the wall color to show the correct image tone.
Brightness	Adjust the brightness of the image. • Press ◀ to darken image. • Press ▶ to lighten the image.
Contrast	"Contrast" controls the difference between the lightest and darkest parts of the picture. Adjusting the contrast changes the amount of black and white in the image. • Press ◀ to decrease the contrast. • Press ▶ to increase the contrast.
Color Temperature	Adjust the color temperature. At higher color temperatures, the screen looks colder; at lower color temperatures, the screen looks warmer.
Degamma	Effects the representation of dark scenery. With greater gamma value, dark scenery will look brighter.
Color R	Adjusts the red color.
Color G	Adjusts the green color.
Color B	Adjusts the blue color.
Saturation	Adjusts a video image from black and white to fully saturated color. • Press ◀ to decrease the amount of color in the image. • Press ▶ to increase the amount of color in the image.

FixYourDLP.com
Sponsored by DM
Discount-Merchant.com (800) 281-8860
THE TRUSTED SOURCE FOR PROJECTOR LAMPS AND ACCESSORIES

Tint	Adjusts the color balance of red and green. • Press ◀ to increase the amount of green in the image. • Press ▶ to increase the amount of red in the image.

Note: "Saturation" and "Tint" functions are not supported under computer or HDMI mode.

Image

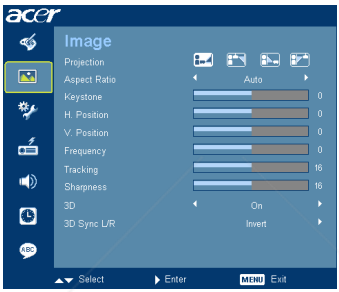

Projection 	Front-Desktop • The factory default setting.
	Front-Ceiling • When you select this function, the projector inverts the image for ceiling-mounted projection.
	Rear-Desktop • When you select this function, the projector reverses the image so you can project from behind a translucent screen.
	Rear-Ceiling • When you select this function, the projector reverses and inverts the image at same time. You can project from behind a translucent screen with ceiling mounted projection.
Aspect Ratio 	Use this function to choose your desired aspect ratio. • Auto: Keep the image with original width-higth ratio and maximize the image to fit native horizontal or vertical pixels. • Full: Resize image to fit full screen by width (1280 pixels) and height (800 pixels). • 4:3: The image will be scaled to fit the screen and displayed using a 4:3 ratio. • 16:9: The image will be scaled to fit the width of the screen and the height adjusted to display the image using a 16:9 ratio. • L.Box: Keep original signal aspect ratio and zoom in by 1.333 times.

FixYourLaptop
Discount Merchant.com | 800-877-8860
THE TRUSTED SOURCE FOR PROJECTOR LAMPS AND ACCESSORIES

Keystone	Adjust image distortion caused by tilting projection. (±40 degrees)
H. Position (Horizontal position)	• Press ◀ to move the image left. • Press ▶ to to move the image right.
V. Position (Vertical position)	• Press ◀ to move the image down. • Press ▶ to move the image up.
Frequency	"Frequency" changes the projector's refresh rate to match the frequency of your computer's graphics card. If you can see a vertical flickering bar in the projected image, use this function to make the necessary adjustments.
Tracking	Synchronizes the signal timing of the projector with the graphics card. If you experience an unstable or flickering image, use this function to correct it.
Sharpeness	Adjusts the sharpness of the image. • Press ◀ to decrease the sharpness. • Press ▶ to increase the sharpness.
3D	Choose "On" to enable DLP 3D function. • On: Choose this item while using DLP 3D glasses, quad buffer (NVIDIA/ATI…) graphic card and HQFS format file or DVD with corresponding SW player. • Off: Turn off 3D mode.
3D Sync L/R	If you see a discrete or overlapping image while wearing DLP 3D glasses, you may need to execute "Invert" to get best match of left/ right image sequence to get the correct image (for DLP 3D).

Note: "H. Position", "V. Position", "Frequency" and "Tracking" functions are not supported under HDMI or Video mode.
Note: "Sharpness" function is not supported under HDMI or computer mode.
Note: "3D Sync L/R" is only available when 3D is enabled.
Note: There has reminder screen if 3D still enable when power on projector. Please adjust setting depended on your purpose.
Note: It needs correct settings on graphic card 3D application program for correct 3D display.

The SW players, such as Stereoscopic Player and DDD TriDef Media Player can support 3D format files. You can download these two trial version players on web page below:

- Stereoscopic Player: http://www.3dtv.at/Downloads/Index_en.aspx
- DDD TriDef Media Player: http://www.tridef.com/download/TriDef-3-D-Experience-4.0.2.html

FixYourDLP.com
Sponsored by
Discount-Merchant.com (800) 281-8860
THE TRUSTED SOURCE FOR PROJECTOR LAMPS AND ACCESSORIES

Notice : 3D display mode is enabled now.
1. Please make sure to input correct 3D signals and wear 3D glasses at the same time. You may need to execute "Invert" function for "3D Sync L/R" option to get the correct image.
2. Please remember to turn off 3D if you don't want to see 3D images.

Management

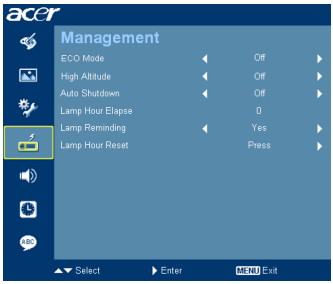

ECO Mode	Choose "On" to dim the projector lamp which will lower power consumption, extend the lamp life and reduce noise. Choose "Off" to return normal mode.
High Altitude	Choose "On" to turn on High Altitude mode. Operate the fans at full speed continuously to allow for proper high altitude cooling of the projector.
Auto Shutdown	The projector will automatically shutdown when there is no signal input after the allocated time. (in minutes)
Lamp Hour Elapse	Displays the lamp's elapsed operating time (in hours).
Lamp Reminding	Activate this function to display a reminder to change the lamp 30 hours before its expected end-of-life.
Lamp Hour Reset	Press the ▶ button and choose "Yes" to turn the lamp hour counter to 0 hours.

Setting

Menu Location	Choose the menu location on the display screen.
Source Lock	When source lock is turned "off", the projector will search for other signals if the current input signal is lost. When source lock is turned "on", it will "lock" the current source channel unless you press "Source" button on the remote control for the next channel.
Startup Screen	Use this function to select your desired startup screen. If you change the setting, the changes will take effect when you exit the OSD menu. • Acer: The default startup screen of your Acer projector. • User: Use memorize picture from "Screen Capture" function.

FixYourDLP.com
Sponsored by DM
Discount-MODELPROJECTOR 1-831-421-8860
THE TRUSTED SOURCE FOR PROJECTOR LAMPS AND ACCESSORIES

Screen Capture 	Use this function to customize the startup screen. To capture the image that you want to use as the startup screen, follow the instructions below. Notice: Before proceeding with the following steps, make sure that the "Keystone" is set to the default value 0 and the aspect ratio is set to 4:3. For details, refer to the "Image" section. • Change the "Startup Screen" from the default setting "Acer" to "User". • Press "Screen Capture" to customize the startup screen. • A dialog box appears to confirm the action. Choose "Yes" to use the current image as your customized startup screen. The capture range is the red rectangular area. Choose "No" to cancel the screen capture and exit the onscreen display (OSD). • A message appears, stating that the screen capture is in progress. • When the screen capture is finished, the message disappears and the original display is shown. • The customized startup screen, as shown below, takes effect when there is a new input signal or when you restart the projector.
Closed Caption	Selects a preferred closed captioning mode from CC1, CC2, CC3, CC4, (CC1 displays captions in the primary language in your area). Select "Off" to turn off the captioning feature. This function is only available when a composite video or S-Video input signal is selected and its system format is NTSC. <Note> Set your screen aspect ratio to 4:3. This function is not available when the aspect ratio is "16:9" or "Auto" .
Security 	**Security** This projector provides a useful security function for the administrator to manage usage of the projector . Press ▶ to change the "Security" setting. If the security function is enabled, your must enter the "Administrator Password" first before changing the security settings. • Select "On" to enable the security function. The user has to enter a password to operate the projector. Please refer to the "User Password" section for details. • If "Off" is selected, then the user can turn on the projector without password.
	Timeout(Min.) Once "Security" is activated to "On", the administrator can set timeout function. • Press ◀ or ▶ to select the timeout interval. • The range is from 10 minute to 990 minutes. • When the time is up, the projector will prompt the user to enter the password again. • The factory default setting of "Timeout(Min.)" is "Off". • Once the security function is enabled, the projector will request user to enter password when switch on the projector. Both "User Password" and "Administrator Password" can be accepted for this dialogue.

FixYourDLP.com
Sponsored by DM
Discount-Merchant.com (800) 981-8860
THE TRUSTED SOURCE FOR POWERED PROJECTORS AND ACCESSORIES

Note: This screen capture function is limited by 4:3 aspect ratio only.
Note: For XGA models, to get best quality for you desired image, suggest end-user set PC resolution to 1024 x 768 before you use this function.
Note: For WXGA models, to get best quality for you desired image, suggest end-user set PC resolution to 1280 x 800 before you use this function.

 	User password • Press ▶ to setup or change the "User Password". • Press number keys to set your password on the remote control and press "MENU" to confirm. • Press ◀ to delete character. • Enter the password when you see "Confirm Password" displayed. • The password should be between 4 and 8 characters long. • If you select "Request password only after plugging power cord", the projector will prompt the user to enter the password every time the power cord is plugged. • If you select "Always request password while projector turns on", the user has to enter the password every time when the projector is turned on.
	Administrator Password The "Administrator Password" can be used in both the "Enter Administrator Password" and "Enter Password" dialog boxes. • Press ▶ to change the "Administrator Password". • The factory default of "Administrator Password" is "1234". If you forgot your administrator password, do the following to retrieve the administrator password: • An unique 6-digit "Universal Password" which is printed on the Security Card (please check accessory in the box). This unique password is the number which will be accepted by projector anytime no matter what the Administrator Password is. • If losing this security card and number, please contact with an Acer service center.
	Lock User Startup Screen • Default Lock User Startup Screen is "OFF". If lock user startup screen is "ON", users cannot change startup screen anymore and avoid other users change that arbitrarily. Choose "OFF" to unlock startup screen.
VGA OUT (Standby)	• Default is "Off". Choose "On" to enable VGA OUT connection.
Reset	• Press the ▶ button and choose "Yes" to return the parameters on all menus to the factory default settings.
Wireless	• Please refer to wireless booklet for details. (for P5271i only)
Auto Screen	• Default is On, the down/up move of electronic screen will be related with power on/off of Projector. (For P5271n only)
LAN	• Default is "Off". Choose "On" to enable LAN connection. (For P5271i/P5271n only)
LAN IP/Mask	• Identify IP and Mask address. (For P5271i/P5271n only)

FixYourDLP.com
Sponsored by DM
Discount-Merchant.com (800) 287 8860
THE TRUSTED SOURCE FOR PROJECTOR LAMPS AND ACCESSORIES

Audio

Volume	• Press ◀ to decrease the volume. • Press ▶ to increase the volume.
Mute	• Choose "On" to mute the volume. • Choose "Off" to restore the volume.
Power On/Off Volume	• Select this function to adjust the notification volume when turning the projector on/off.
Alarm Volume	• Select this function to adjust the volume of any warning notifications.

Timer

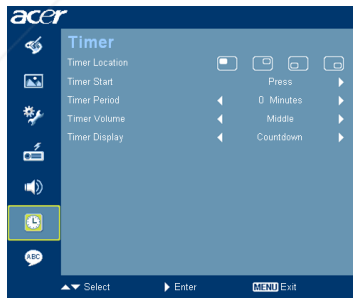

Timer Location	• Choose the location of the timer on the screen.
Timer Start	• Press ▶ to start or stop the timer.
Timer Period	• Press ◀ or ▶ to adjust the timer period.
Timer Volume	• Select this function to adjust the notification volume when the timer function is enabled and time is up.
Timer Display	• Press ◀ or ▶ to which timer mode to display on the screen.

FixYourDLP.com
Sponsored by DM
Discount-Merchant.com (800) 281-8860
THE TRUSTED SOURCE FOR PROJECTOR LAMPS AND ACCESSORIES

Language

Language	Choose the multilingual OSD menu. Use the ▲ or ▼ key to select your preferred menu language. • Press ▶ to confirm the selection.

FixYourDLP.com
Sponsored by DM
Discount-Merchant.com (800) 281-8860
THE TRUSTED SOURCE FOR PROJECTOR LAMPS AND ACCESSORIES

Appendices

Troubleshooting

If you experience a problem with your Acer projector, refer to the following troubleshooting guide. If the problem persists, please contact your local reseller or service center.

Image Problems and Solutions

#	Problem	Solution
1	No image appears onscreen	• Connected as described in the "Getting Started" section. • Ensure none of the connector pins are bent or broken. • Check if the projector lamp has been securely installed. Please refer to the "Replacing the Lamp" section. • Make sure you have removed the lens cap and the projector is switched on.

2	Partial, scrolling or incorrectly displayed image(For PC (Windows 95/98/ 2000/XP))	• Press "RESYNC" on the remote control or control panel.
		• For an incorrectly displayed image:
		  • Open "My Computer," open the "Control Panel," and then double-click the "Display" icon.
		  • Select the "Settings" tab.
		  • Verify that your display resolution setting is lower than or equal to UXGA (1600 x 1200).
		  • Click the "Advanced Properties" button.
		If the problem still appears, change the monitor display you are using and follow the steps below:
		  • Verify that the resolution setting is lower than or equal to UXGA (1600 x 1200).
		  • Click the "Change" button under the "Monitor" tab.
		  • Click "Show all devices". Next, select "Standard monitor types" under the SP box, and choose the resolution mode you need under the "Models" box.
		  • Verify that the resolution setting of the monitor display is lower than or equal to UXGA (1600 x 1200).

FixYourDLP.com
Sponsored by DM
Discount-Merchant.com (800) 281-8860
THE TRUSTED SOURCE FOR PROJECTOR LAMPS AND ACCESSORIES

3	Partial, scrolling or incorrectly displayed image (for notebooks)	• Press "RESYNC" on the remote control or control panel.
		• For an incorrectly displayed image:
		  • Follow the steps for item 2 (above) to adjust the resolution of your computer.
		  • Press the toggle output settings. Example: [Fn]+[F4], Compaq [Fn]+[F4], Dell [Fn]+[F8], Gateway [Fn]+[F4], IBM [Fn]+[F7], HP [Fn]+[F4], NEC [Fn]+[F3], Toshiba [Fn]+[F5]
		• If you experience difficulty changing resolutions or your monitor freezes, restart all equipment including the projector.

4	The screen of the notebook computer is not displaying your presentation	• If you are using a Microsoft® Windows® based notebook: Some notebook PCs may deactivate their own screens when a second display device is in use. Each has a different way to be reactivated. Refer to your computer's manual for detailed information. • If you are using an Apple® Mac® OS based notebook: In System Preferences, open Display and select Video Mirroring "On".
5	Image is unstable or flickering	• Adjust the "Tracking" to correct it. Refer to the "Image" section for more information. • Change the display color depth settings on your computer.
6	Image has vertical flickering bar	• Use "Frequency" to make an adjustment. Refer to the "Image" section for more information. • Check and reconfigure the display mode of your graphics card to make it compatible with the projector.
7	Image is out of focus	• Make sure the lens cap is removed. • Adjusts the focus ring on the projector lens. • Make sure the projection screen is within the required distance of 4.9 to 32.4 feet (1.5 to 9.9 meters)(P5271/P5271i/P5271n/P5290) from the projector and 4.9 to 27.6 feet (1.5 to 8.4 meters)(P5390W) from the projector. Refer to the "How to Get a Preferred Image Size by Adjusting Distance and Zoom" section for more information.
8	Image is stretched when displaying a "widescreen" DVD title	When you play a DVD encoded in anamorphic or 16:9 aspect ratio you may need to adjust the following settings: • If you play a 4:3 format DVD title, please change the format to 4:3 in the projector OSD. • If the image is still stretched, you will also need to adjust the aspect ratio. Set up the display format to 16:9 (wide) aspect ratio on your DVD player.

FixYourDLP.com
Sponsored by
Discount-Merchant.com (888) 281-8860
THE TRUSTED SOURCE FOR PROJECTOR LAMPS AND ACCESSORIES

9	Image is too small or too large	• Adjust the zoom ring on the top of the projector. • Move the projector closer to or further from the screen. • Press "MENU" on the remote control or on the control panel. Go to "Image --> Aspect Ratio" and try different settings.
10	Image has slanted sides	• If possible, reposition the projector so that it is centered on the screen. • Press the "Keystone ⏢ / ⏢ " on the OSD or the remote control until the sides are vertical.
11	Image is reversed	• Select "Image --> Projection" on the OSD and adjust the projection direction.

Problems with the Projector

#	Condition	Solution
1	The projector stops responding to all controls	If possible, turn off the projector, then unplug the power cord and wait at least 30 seconds before reconnecting power.
2	Lamp burns out or makes a popping sound	When the lamp reaches the end of its useful life, it will burn out and may make a loud popping sound. If this happens, the projector will not turn on until the lamp module has been replaced. To replace the lamp, follow the procedures in the "Replacing the Lamp" section.

FixYourDLP.com
Sponsored by DM
Discount-Merchant.com (800) 281-8860
THE TRUSTED SOURCE FOR PROJECTOR LAMPS AND ACCESSORIES

OSD Messages

#	Condition	Message Reminder
1	Message	Fan Fail - the system fan is not working. Fan Fail. Lamp will automatically turn off soon. Projector Overheated - the projector has exceeded its recommended operating temperature and must be allowed to cool down before it may be used. Please also check the dust filters if they are installed. If the dust filter is clogged with dust, please clean it. Please refer to "Cleaning and replacing the dust filter" for details. Projector Overheated. Lamp will automatically turn off soon. Replace the lamp - the lamp is about to reach its maximum lifetime. Prepare to replace it soon. Lamp is approaching the end of its useful life in full power operation. Replacement suggested!

FixYourDLP.com
Sponsored by DM
Discount-Merchant.com (800) 281-8860
THE TRUSTED SOURCE FOR PROJECTOR LAMPS AND ACCESSORIES

LED & Alarm Definition Listing

LED Messages

Message	Lamp LED	Temp LED	Power LED	
	Red	Red	Red	Blue
Standby (power cord plugged in)	--	--	V	--
Power button ON	--	--	--	V
Lamp retry	--	--	--	Quick flashing
Turning off (cooling state)	--	--	Quick flashing	--
Turning off (cooling completed)	--	--	V	--
Error (thermal failure)	--	V	--	V
Error (fan lock failure)	--	Quick flashing	--	V
Error (lamp breakdown)	V	--	--	V
Error (color Wheel fail)	Quick flashing	--	--	V

FixYourDLP.com
Sponsored by DM
Discount-Merchant.com (800) 281-8860
THE TRUSTED SOURCE FOR PROJECTOR LAMPS AND ACCESSORIES

Replacing the Lamp

Use a screwdriver to remove the screw(s) from the cover, and then pull out the lamp.

The projector will detect the lamp life. You will be shown a warning message "**Lamp is approaching the end of its useful life in full power operation. Replacement Suggested!**" When you see this message, change the lamp as soon as possible. Make sure the projector has been cooling down for at least 30 minutes before changing the lamp.

Warning: The lamp compartment is hot! Allow it to cool down before changing the lamp.

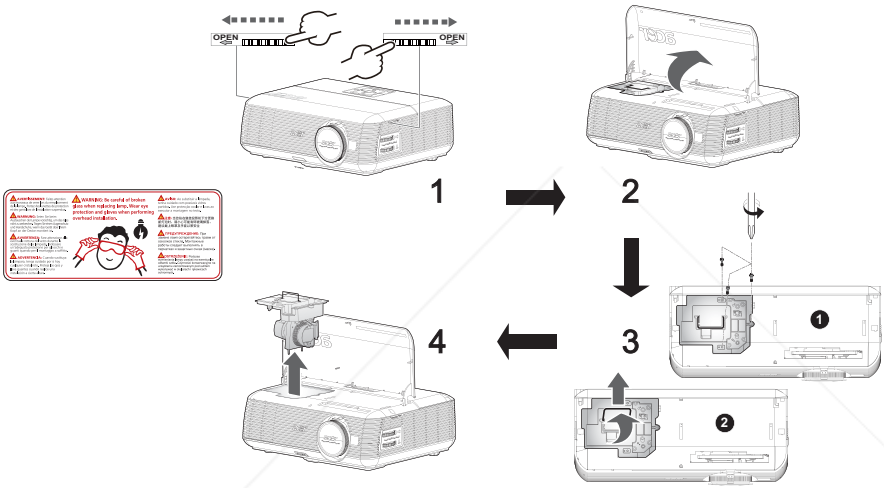

To Change the Lamp

1 Turn off the projector by pressing the power button.
2 Allow the projector at least 30 mins to cool down.
3 Disconnect the power cord.
4 Find the "OPEN" buttons on both sides of the projector and push it at the same time. (Illustration #1)
5 Open the top cover. (Illustration #2)
6 Remove the two screws that secure the lamp module❶ and pull up the lamp bar❷.(Illustration #3)
7 Pull out the lamp module by force. (Illustration #4)

To replace the lamp module, reverse the previous step.

FixYourDLP.com
Sponsored by DLP
Discount-Merchant.com (800) 281-8860
THE TRUSTED SOURCE FOR PROJECTOR LAMPS AND ACCESSORIES

Warning: To reduce the risk of personal injury, do not drop the lamp module or touch the lamp bulb. The bulb may shatter and cause injury if it is dropped.

Ceiling Mount Installation

If you wish to install the projector using a ceiling mount, please refer to the steps below:

1 Drill four holes into a solid, structurally sound part of the ceiling, and secure the mount base.

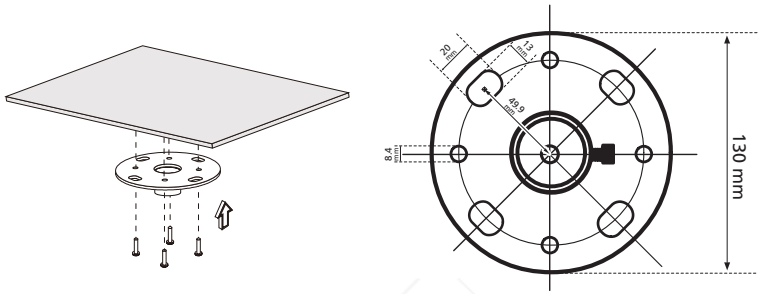

Note: Screws are not included. Please obtain the appropriate screws for your type of ceiling.

2 Secure the ceiling rod using the appropriate type of four-cylinder screws.

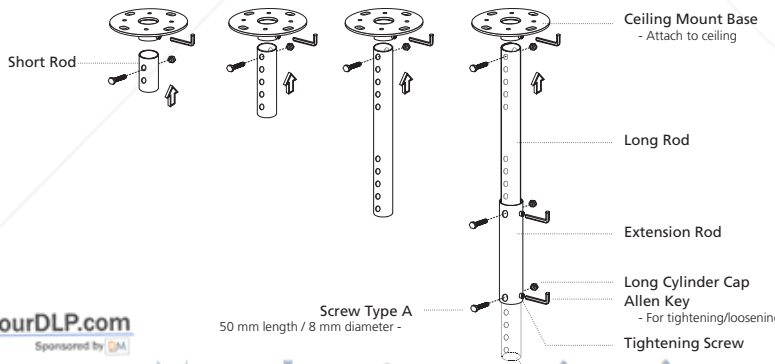

FixYourDLP.com
Sponsored by DM
Discount-Merchant.com (800) 281-8860
THE TRUSTED SOURCE FOR PROJECTOR LAMPS AND ACCESSORIES

3 Use the appropriate number of screws for the projector size to attach the projector to the ceiling mount bracket.

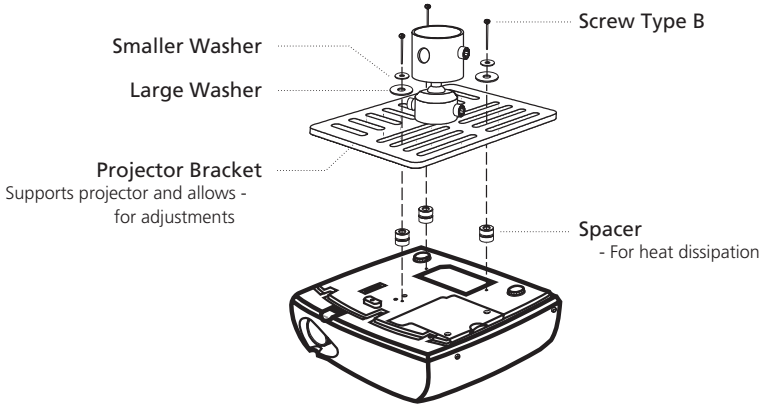

Note: It is recommended that you keep a reasonable space between the bracket and the projector to allow for proper heat distribution. Use two washers for extra support, if deemed necessary.

4 Attach the ceiling bracket to the ceiling rod.

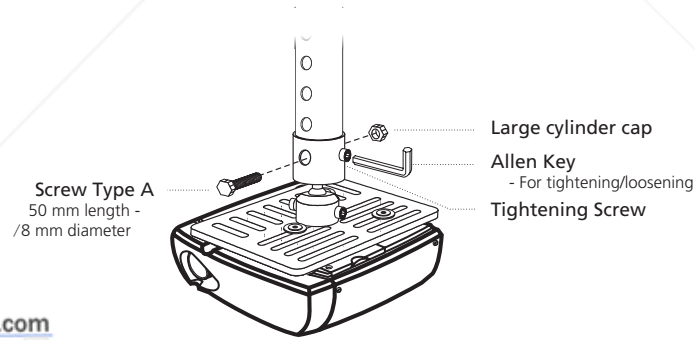

FixYourDLP.com
Sponsored by DM
Discount-Merchant.com (800) 281-8860
THE TRUSTED SOURCE FOR PROJECTOR LAMPS AND ACCESSORIES

5 Adjust the angle and positioning as necessary.

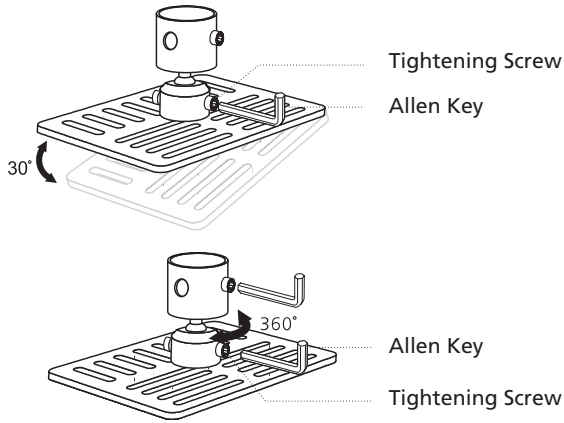

Note: The appropriate type of screw and washer for each model is listed in the table below. 3 mm diameter screws are enclosed in the screw pack.

Models	Screw Type B		Washer Type	
	Diameter (mm)	Length (mm)	Large	Small
P5271/P5271i/ P5271n/P5390W/ P5290	3	25	V	V

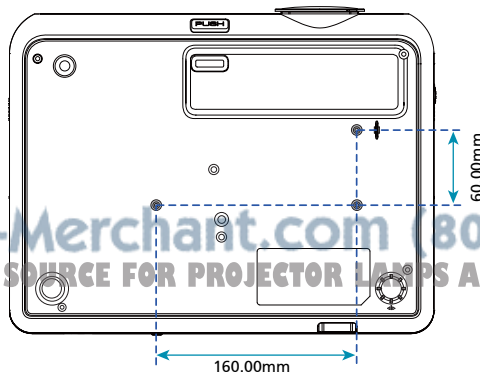

FixYourDLP.com
Sponsored by DM
Discount-Merchant.com (800) 281-8860
THE TRUSTED SOURCE FOR PROJECTOR LAMPS AND ACCESSORIES

Specifications

The specifications listed below are subject to change without notice. For final specs, please refer to Acer's published marketing specifications.

Projection system	DLP®
Resolution	P5271/P5271i/P5271n/P5290: Native: XGA (1024 x768), Maximum: UXGA (1600 x 1200), WSXGA+ (1680x1050) P5390W:Native: WXGA (1280 x 800), Maximum: UXGA (1600 x 1200), WSXGA+ (1680 x 1050)
Computer compatibility	IBM PC and compatibles, Apple Macintosh, iMac and VESA standards: SXGA, XGA, VGA, SVGA, SXGA+, WXGA, WXGA+, WSXGA+
Video compatibility	NTSC (3.58/4.43), PAL (B/D/G/H/I/M/N), SECAM (B/D/G/K/K1/L), HDTV (720p, 1080i, 1080p), EDTV (480p, 576p), SDTV (480i, 576i)
Aspect ratio	4:3 (native), 16:9 (P5271/P5271i/P5271n/P5290) Full/4:3/16:9/L.Box (P5390W)
Displayable colors	1.07 billion colors
Projection lens	F/ 2.41-3.2, f = 18.39mm - 29.42mm, 1.6X manual zoom lens (P5271/P5271n/P5290/P5390W/P5271i)
Projection screen size (diagonal)	28" (0.71 m) - 300" (7.62 m) (P5271/P5271i/P5271n/P5290) 33" (0.84m) - 300" (7.62 m) (P5390W)
Projection distance	4.9' (1.5 m) - 32.4' (9.9 m) (P5271/P5271i/P5271n/P5290) 4.9' (1.5m) - 27.6' (8.4m) (P5390W)
Throw ratio	61"@2m (1.62 - 2.64:1) (P5271/P5271i/P5271n/P5290) 71"@2m (1.30 - 2.11:1) (P5390W)
Horizontal scan rate	30 k - 100 kHz
Vertical refresh scan rate	50 - 120 Hz
Lamp type	P5271/P5271i/P5271n: 230W user-replaceable lamp P5290/P5390W: 280W user-replaceable lamp
Keystone correction	+/- 40 degrees
Audio	Internal speaker with 2 W x 1 output
Weight	4.5kg (9.6lbs.)
Dimensions (W x D x H)	341mm x 120mm x 261mm (13.4" x 4.7" x 10.3")
Remote control	Laser pointer function
Digital Zoom	2X
Power supply	AC input 100 - 240 V, 50 - 60 Hz
Power consumption	P5271: 320W P5290/P5390W: 380W P5271i: 325W
Operating temperature	5°C to 35°C / 41°F to 95°F

FixYourDLP.com
Sponsored by DM
Discount Merchant.com (800) 281-8860
THE TRUSTED SOURCE FOR PROJECTOR LAMPS AND ACCESSORIES

I/O connectors	• Power socket x1 • VGA input x2 • Composite input x1 • S-Video x1 • VGA output x1 • HDMI x1 • DVI-D x1: with HDCP support • Phone jack audio output x 1 • RS232 3-pin min dim jack x1 • USB x1: for remote computer control **Below items are for P5271i only:** • Wireless antenna x 2 • RJ45 x 1 • Audio output x 1 **Below items are for P5271n only:** • RJ45 x 1 • DC Jack x 1
Standard package contents	• AC power cord x1 • VGA cable x1 • DVI-D cable x1 • Composite video cable x1 • Remote control x1 • Battery x 2 (for remote control) • User's Guide (CD-ROM) x2 (Wireless CD for P5271i) • Quick start guide x2 (Wireless Quick Start Guide for P5271i) • Security card x 1 • Carrying case x1 • Wireless antenna x2 (for P5271i) • Battery Pack with PnS handy drive x1 (for P5271i)

* Design and specifications are subject to change without notice.

FixYourDLP.com
Sponsored by DM
Discount-Merchant.com (800) 281-8860
THE TRUSTED SOURCE FOR PROJECTOR LAMPS AND ACCESSORIES

Compatibility modes

A. VGA Analog

1 VGA Analog - PC Signal

Modes	Resolution	V.Frequency [Hz]	H.Frequency [KHz]
VGA	640x480	60	31.47
	640x480	72	37.86
	640x480	75	37.50
	640x480	85	43.27
	640x480	119.51	61.60
SVGA	800x600	56	35.20
	800x600	60	37.88
	800x600	72	48.08
	800x600	75	46.88
	800x600	85	53.67
	800x600	119.85	77.20
XGA	1024x768	60	48.36
	1024x768	70	56.48
	1024x768	75	60.02
	1024x768	85	68.67
	1024x768	119.804	98.80
SXGA	1152x864	70	63.80
	1152x864	75	67.50
	1152x864	85	77.10
	1280x1024	60	63.98
	1280x1024	72	77.90
	1280x1024	75	79.98
	1280x1024	85	91.15
QuadVGA	1280x960	60	60.00
	1280x960	75	75.00
SXGA+	1400x1050	60	65.32
UXGA	1600x1200	60	75.00
PowerBook G4	640x480	60	31.50
PowerBook G4	640x480	66.6 (67)	35.00
PowerBook G4	800x600	60	37.88
PowerBook G4	1024x768	60	48.36
PowerBook G4	1152x870	75	68.68
PowerBook G4	1280x960	75	75.20
i Mac DV (G3)	1024x768	75	60.30

FixYourDLP.com
DiscountMerchant.com (800) 281-8860
THE TRUE SOURCE FOR PROJECTOR LAMPS AND ACCESSORIES

2 VGA Analog - Extended Wide timing

Modes	Resolution	V.Frequency [Hz]	H.Frequency [KHz]
WXGA	1280x768	60	47.78
	1280x768	75	60.29
	1280x768	85	68.63
	1280x720	60	44.80
	1280x800	60	49.60
	1440x900	60	55.90
	1680x1050	60	65.30
	1366x768	60	47.71
	1920x1080	60	66.60
	1024x600	60	37.30

3 VGA Analog - Component Signal

Modes	Resolution	V.Frequency [Hz]	H.Frequency [KHz]
480p	720x480	59.94	31.47
576p	720x576	50	31.25
720p	1280x720	60	45.00
720p	1280x720	50	37.50
1080i	1920x1080	60 (30)	33.75
1080i	1920x1080	50 (25)	33.75
1080p	1920x1080	60	67.50
1080p	1920x1080	50	56.26

B. DVI Digital (N/A)

C. HDMI Digital

1 HDMI - PC Signal (same as DVI)

Modes	Resolution	V.Frequency [Hz]	H.Frequency [KHz]
VGA	640x480	60	31.47
	640x480	72	37.86
	640x480	75	37.50
	640x480	85	43.27
	640x480	119.51	61.61
SVGA	800x600	56	35.20
	800x600	60	37.88
	800x600	72	48.08
	800x600	75	46.88
	800x600	85	53.67
	800x600	119.85	77.20

FixYourDLP.com
Sponsored by DM
Discount-Merchant.com (800) 281-8860
THE TRUSTED SOURCE FOR PROJECTOR LAMPS AND ACCESSORIES

XGA	1024x768	60	48.36
	1024x768	70	56.48
	1024x768	75	60.02
	1024x768	119.804	98.80
	1152x864	75	67.50
	1152x864	85	77.10
	1280x1024	60	64.00
	1280x1024	72	77.90
	1280x1024	75	79.98
	1280x1024	85	91.15
	1280x960	75	75.00
PowerBook G4	640x480	60	31.50
PowerBook G4	640x480	66.6 (67)	35.00
PowerBook G4	800x600	60	37.88
PowerBook G4	1024x768	60	48.36
PowerBook G4	1152x870	75	68.68
PowerBook G4	1280x960	75	75.20
i Mac DV (G3)	1024x768	75	60.30

2 HDMI - Extended Wide timing (same as DVI)

Modes	Resolution	V.Frequency [Hz]	H.Frequency [KHz]
WXGA	1280x768	60	47.78
	1280x768	75	60.29
	1280x768	85	68.63
	1280x720	60	44.80
	1280x800	60	49.60
	1440x900	60	55.90
	1680x1050	60	63.30
	1366x768	60	47.71
	1920x1080	60	66.60
	1024x600	60	37.30

FixYourDLP.com
Sponsored by DM
Discount-Merchant.com (800) 281-8860
THE TRUSTED SOURCE FOR PROJECTOR LAMPS AND ACCESSORIES

3 HDMI - Video Signal

Modes	Resolution	V.Frequency [Hz]	H.Frequency [KHz]
480i	**720x480(1440x480)**	**59.94 (29.97)**	**27.00**
480p	720x480	59.94	31.47
576i	**720x576(1440x576)**	**50 (25)**	**27.00**
576p	720x576	50	31.25
720p	1280x720	60	45.00
720p	1280x720	50	37.50
1080i	1920x1080	60 (30)	33.75
1080i	1920x1080	50 (25)	33.75
1080p	1920x1080	60	67.50
1080p	1920x1080	50	56.26
	Horizontal scan rate:	30k~100kHz	
	Vertical scan rate:	50~120Hz	

FixYourDLP.com
Sponsored by DM
Discount-Merchant.com (800) 281-8860
THE TRUSTED SOURCE FOR PROJECTOR LAMPS AND ACCESSORIES

Regulations and safety notices

FCC notice

This device has been tested and found to comply with the limits for a Class B digital device pursuant to Part 15 of the FCC rules. These limits are designed to provide reasonable protection against harmful interference in a residential installation. This device generates, uses, and can radiate radio frequency energy and, if not installed and used in accordance with the instructions, may cause harmful interference to radio communications.

However, there is no guarantee that interference will not occur in a particular installation. If this device does cause harmful interference to radio or television reception, which can be determined by turning the device off and on, the user is encouraged to try to correct the interference by one or more of the following measures:

- Reorient or relocate the receiving antenna.
- Increase the separation between the device and receiver.
- Connect the device into an outlet on a circuit different from that to which the receiver is connected.
- Consult the dealer or an experienced radio/television technician for help.

Notice: Shielded cables

All connections to other computing devices must be made using shielded cables to maintain compliance with FCC regulations.

Notice: Peripheral devices

Only peripherals (input/output devices, terminals, printers, etc.) certified to comply with the Class B limits may be attached to this equipment. Operation with non-certified peripherals is likely to result in interference to radio and TV reception.

Caution

Changes or modifications not expressly approved by the manufacturer could void the user's authority, which is granted by the Federal Communications Commission, to operate this device.

Operation conditions

This device complies with Part 15 of the FCC Rules. Operation is subject to the following two conditions: (1) this device may not cause harmful interference, and (2) this device must accept any interference received, including interference that may cause undesired operation.

FixYourDLP.com
Discount replacement lamp for Acer model 8860
THE TRUSTED SOURCE FOR PROJECTOR LAMPS AND ACCESSORIES

Notice: Canadian users

This Class B digital apparatus complies with Canadian ICES-003.

Remarque à l'intention des utilisateurs canadiens

Cet appareil numérique de la classe B est conforme a la norme NMB-003 du Canada.

Canada — Low-power license-exempt radio communication devices (RSS-210)

a Common information
Operation is subject to the following two conditions:
1. This device may not cause interference, and
2. This device must accept any interference, including interference that may cause undesired operation of the device.

b Operation in 2.4 GHz band
To prevent radio interference to the licensed service, this device is intended to be operated indoors and installation outdoors is subject to licensing.

Declaration of Conformity for EU countries

Acer hereby declares that this projector series is in compliance with the essential requirements and other relevant provisions of Directive 1999/5/EC.

Compliant with Russian regulatory certification

ME61

Radio device regulatory notice

Note: The regulatory information below is for models with wireless LAN and/or Bluetooth only.

General

This product complies with the radio frequency and safety standards of any country or region in which it has been approved for wireless use. Depending on configurations, this product may or may not contain wireless radio devices (such as wireless LAN and/or Bluetooth modules). The below information is for products with such devices.

FixYourDLP.com
Discount-Merchant.com (800) 281-8860
THE TRUSTED SOURCE FOR PROJECTOR LAMPS AND ACCESSORIES

European Union (EU)

R&TTE Directive 1999/5/EC as attested by conformity with the following harmonized standard:

- **Article 3.1(a) Health and Safety**
  - EN60950-1:2001 + A11:2004
  - EN50371:2002
- **Article 3.1(b) EMC**
  - EN301 489-1 V1.6.1
  - EN301 489-3 V1.4.1 (Applicable to non-bluetooth wireless keyboard mouse set)
  - EN301 489-17 V1.2.1
- **Article 3.2 Spectrum Usages**
  - EN300 440-2 V1.1.2 (Applicable to non-bluetooth wireless keyboard mouse set)
  - EN300 328 V1.7.1
  - EN301 893 V1.4.1 (Applicable to 5GHz high performance RLAN)

List of applicable countries

EU member states as of May 2004 are: Belgium, Denmark, Germany, Greece, Spain, France, Ireland, Italy, Luxembourg, the Netherlands, Austria, Portugal, Finland, Sweden, United Kingdom Estonia, Latvia, Lithuania, Poland, Hungary, Czech Republic, Slovak Republic, Slovenia, Cyprus and Malta. Usage allowed in the countries of European Union, as well as Norway, Switzerland, Iceland and Liechtenstein. This device must be used in strict accordance with the regulations and constraints in the country of use. For further information, please contact a local office in the country of use.

FixYourDLP.com
Sponsored by DM
Discount-Merchant.com (800) 281-8860
THE TRUSTED SOURCE FOR PROJECTOR LAMPS AND ACCESSORIES

Acer America Corporation

333 West San Carlos St., San Jose
CA 95110, U. S. A.
Tel : 254-298-4000
Fax : 254-298-4147
www.acer.com

Federal Communications Commission Declaration of Conformity

This device complies with Part 15 of the FCC Rules. Operation is subject to the following two conditions: (1) this device may not cause harmful interference, and (2) this device must accept any interference received, including interference that may cause undesired operation.

The following local Manufacturer / Importer is responsible for this declaration:

Product:	**DLP Projector**
Model Number:	**DNX0811/DNX0814/DWX0815**
Machine Type:	**P5271/P5271i/P5271n/P5390W/P5290 series**
Name of Responsible Party:	**Acer America Corporation**
Address of Responsible Party:	**333 West San Carlos St. San Jose, CA 95110 U. S. A.**
Contact Person:	**Acer Representative**
Phone No.:	**254-298-4000**
Fax No.:	**254-298-4147**

FixYourDLP.com
Sponsored by DM
Discount-Merchant.com (800) 281-8860
THE TRUSTED SOURCE FOR PROJECTOR LAMPS AND ACCESSORIES

Acer Incorporated
8F, 88, Sec. 1, Hsin Tai W u Rd., Hsichih
Taipei Hsien 221, Taiwan

Declaration of Conformity

We,

Acer Incorporated
8F, 88, Sec. 1, Hsin Tai Wu Rd., Hsichih, Taipei Hsien 221, Taiwan
Contact Person: Mr. Easy Lai, e-mail:easy_lai@acer.com.tw

And,

Acer Europe SA
Via Cantonale, Centro Galleria 2 6928 Manno Switzerland

Hereby declare that:

Product: **Projector**
Trade Name: **Acer**
Model Number: **DNX0811/DNX0814/DWX0815**
Machine Type: **P5271/P5271i/P5271n/P5390W/P5290 series**

Is compliant with the essential requirements and other relevant provisions of the following EC directives, and that all the necessary steps have been taken and are in force to assure that production units of the same product will continue comply with the requirements.

EMC Directive 2004/108/EC as attested by conformity with the following harmonized standards:

-. EN55022, AS/NZS CISPR22, Class B
-. EN55024
-. EN61000-3-2 Class A
-. EN61000-3-3

Low Voltage Directive 2006/95/EC as attested by conformity with the following harmonized standard:

-. EN60950-1: 2001 + A11: 2004

RoHS Directive 2002/95/EC on the Restriction of the Use of certain Hazardous Substances in Electrical and Electronic Equipment

-. The maximum concentration values of the restricted substances by weight in homogenous material are:

Lead	0.1%	Polybrominated Biphenyls (PBB's)	0.1%
Mercury	0.1%	Polybrominated Diphenyl Ethers (PBDE's)	0.1%
Hexavalent Chromium	0.1%	Cadmium	0.01%

Directive 2005/32/EC of the European Parliament and of the Council with regard to Eco-design Requirements.

FixYourDLP.com
Sponsored by DM
Discount-Merchant.com (800) 281-8860
THE TRUSTED SOURCE FOR PROJECTOR LAMPS AND ACCESSORIES

acer

The standards listed below are applied to the product if built with WLAN module or wireless keyboard and mouse.

R&TTE Directive 1999/5/EC as attested by conformity with the following harmonized standard:

- **Article 3.1(a) Health and Safety**
  - -. EN60950-1
  - -. EN62311
- **Article 3.1(b) EMC**
  - -. EN301 489-1
  - -. EN301 489-17
- **Article 3.2 Spectrum Usages**
  - -. EN300 328
  - -. EN301 893 (Applicable to 5GHz high performance RLAN).

Year to begin affixing CE marking 2009.

Easy Lai

Easy Lai / Manager
Regulation Center, Acer Inc.

Aug. 14, 2009
Date

FixYourDLP.com
Sponsored by DM
Discount-Merchant.com (800) 281-8860
THE TRUSTED SOURCE FOR PROJECTOR LAMPS AND ACCESSORIES

Disclaimer

This user manual is provided as a free service by FixYourDLP.com. FixYourDLP is in no way responsible for the content of this manual, nor do we guarantee its accuracy. FixYourDLP does not make any claim of copyright and all copyrights remain the property of their respective owners.

About FixYourDLP.com
FixYourDLP.com (http://www.fixyourdlp.com) is the World's #1 resource for media product news, reviews, do-it-yourself guides, and manuals.

Informational Blog: http://www.fixyourdlp.com
Video Guides: http://www.fixyourdlp.com/guides
User Forums: http://www.fixyourdlp.com/forum

FixYourDLP's Fight Against Counterfeit Lamps:
http://www.fixyourdlp.com/counterfeits

Sponsors:

RecycleYourLamp.org – Free lamp recycling services for used lamps:
http://www.recycleyourlamp.org

Lamp Research - The trusted 3rd party lamp research company:
http://www.lampresearch.com

Discount-Merchant.com – The worlds largest lamp distributor:
http://www.discount-merchant.com